REFERENCE MANUAL

> Matrix 450N™

DATALOGIC

Datalogic Automation S.r.l.
Via Lavino, 265
40050 - Monte S. Pietro
Bologna - Italy

Matrix 450N™ Reference Manual

Ed.: 10/2016

© 2016 Datalogic S.p.A. and its Group companies ◆ ALL RIGHTS RESERVED. ◆ Protected to the fullest extent under U.S. and international laws. Copying or altering of this document is prohibited without express written consent from Datalogic S.p.A.

Datalogic and the Datalogic logo are registered trademarks of Datalogic S.p.A. in many countries, including the U.S. and the E.U.

Matrix 450N, ID-NET, DL.CODE, X-PRESS and Blue Diamonds are trademarks of Datalogic S.p.A. or of Datalogic Group companies. All other brand and product names are trademarks of their respective owners.

Datalogic shall not be liable for technical or editorial errors or omissions contained herein, nor for incidental or consequential damages resulting from the use of this material.

17/10/16

CONTENTS

REFERENCES ..... **vi**
Conventions vi
Reference Documentation vi
Support Through the Website vi
Patents vi

COMPLIANCE ..... **vii**
EMC Compliance vii
Power Supply vii
CE Compliance vii
FCC Compliance vii
EAC Compliance viii
LT-03x Laser Safety viii
LT-03x LED Safety viii

HANDLING ..... **ix**

GENERAL VIEW ..... **xi**

1 RAPID CONFIGURATION **1**
Step 1 – Assemble the Reader 1
Required Accessories 3
Step 2 – Connect the System 4
Step 3 – Mount and Position the Reader 7
Step 4 – Focus the Reader 8
Step 5 – Calibrate Image Density 10
Step 6 – X-PRESS Configuration 12
Step 7 – Installing DL.CODE Configuration Program 15
Step 8 – Device Configuration 18
Step 9 – Test Mode 29
Advanced Reader Configuration 30

2 INTRODUCTION **31**
2.1 Product Description 31
2.2 Indicators and Keypad Button 34
2.3 ID-NET 35
2.4 X-PRESS Human Machine Interface 37
2.4.1 X-PRESS Functions 37
2.4.2 Diagnostic Indication 39
2.5 Model Description 39
2.5.1 Lens/Illuminator Selection 40
2.6 Accessories 40
2.7 Application Examples 42
2.7.1 Manual Postal Sorting 42
2.7.2 Loading/Unloading 42
2.7.3 Automated Postal Sorting 43
2.7.4 Multimedia and Flats 44
2.7.5 Order Fulfillment 44
2.7.6 Static Scan 45
2.7.7 Manual Presentation Scanning 45

3 INSTALLATION 47
3.1 Package Contents 47
3.2 Mechanical Dimensions 48
3.3 Mounting and Positioning Matrix 450N 50
3.4 Mounting With EMK Mirrors 53
3.4.1 EMK-380 Side Mount – Standard 54
3.4.2 EMK-380 Side Mount - Alternative 55
3.4.3 EMK-600 Side Mount - Standard 56
3.4.4 EMK-600 Side Mount - Alternative 57

4 CBX ELECTRICAL CONNECTIONS 58
4.1 Power Supply 59
4.1.1 Recommended Power Supplies 60
4.2 Main Serial Interface 61
4.2.1 RS232 Interface 61
4.2.2 RS422 Full-Duplex Interface 62
4.3 ID-NET Interface 63
4.3.1 ID-NET Cables 63
4.3.2 ID-NET Response Time 64
4.3.3 ID-NET Network Termination 64
4.4 Auxiliary RS232 Interface 68
4.5 Inputs 69
4.6 Outputs 74
4.7 On-Board Gigabit Ethernet Interface 76
4.8 User Interface – Serial Host 76

5 TYPICAL LAYOUTS 77
5.1 Ethernet Connection 77
5.2 Serial Connection 79
5.3 Fieldbus Connection 80
5.4 Pass-Through 81
5.5 ID-NET Multidata Network (Pass-Through) 82
5.6 ID-NET Synchronized Network 83

6 READING FEATURES 86
6.1 FOV Calculation 86
6.2 Reading Diagrams 87
6.3 Maximum Line Speed and Exposure Time Calculations 97

7 SOFTWARE CONFIGURATION 99
7.1 DL.CODE System Requirements 99
7.2 Reader Configuration 99
7.2.1 Auto Calibration 100
7.2.2 Manual Calibration 101
7.2.3 Multi Image Acquisition Settings 104
7.2.4 Image Cropping 108
7.2.5 Direct Part Marking Applications 111
7.3 Pass-Through Configurations 116
7.4 Internal Network Configurations 117
7.4.1 Master Configuration 118
7.4.2 Multidata ID-NET Network Configurations 121
7.4.3 Synchronized ID-NET Network Configurations 126
7.4.4 Verify Master/Slave Synchronized Configuration 130
7.5 Backup and Restore Through DL.CODE 133
7.5.1 Backup 134

7.5.2 Restore 135
7.5.3 Replacement 135
7.6 Restore Defaults 136
7.6.1 Restore Default Startup Configuration 136
7.6.2 Restore Default Environment 137
7.6.3 Restore Factory Defaults 138
7.7 Diagnostic Alarms 138
7.8 Statistics 139
7.9 BM150 Display Module Configuration and Messages 140
7.9.1 Configuration Through DL.CODE 140
7.9.2 Accessing the HMI Interface Through Keypad and Display Menu 140
7.9.3 Display Messages 142
7.9.4 BM150 Backup and Restore Procedure 145

8 MAINTENANCE 146
8.1 Cleaning 146

9 TROUBLESHOOTING 147
9.1 General Guidelines 147

10 TECHNICAL FEATURES 150

A ALTERNATIVE CONNECTIONS 152
Power, COM and I/O Connector 152
Matrix 450N Lighting System Control Connector 153
Matrix 450N GigaEthernet Connector (**) 155
ID-NET Network Termination 156
Inputs 156
Outputs 156
User Interface - Serial Host 158

GLOSSARY 159

INDEX 162

REFERENCES

CONVENTIONS

This manual uses the following conventions:

"User" refers to anyone using a Matrix 450N reader.
"Reader" refers to the Matrix 450N reader.
"You" refers to the System Administrator or Technical Support person using this manual to install, configure, operate, maintain or troubleshoot a Matrix 450N reader.

REFERENCE DOCUMENTATION

For further details refer to: the DL.CODE™ Help On Line, DL.CODE User's Guide, Matrix Reading Methods provided as supplementary documentation on the DL.CODE mini-DVD (downloaded .zip file or mini-DVD accessory).

SUPPORT THROUGH THE WEBSITE

Datalogic provides several services as well as technical support through its website. Log on to **www.datalogic.com** and click on the **Industrial Automation** links for further information:

- **PRODUCTS – FIXED INDUSTRIAL BARCODE READERS**

  Select your product from the links on the **Fixed Industrial Barcode Readers** page. The product page describes specific Info, Features, Applications, Models, Accessories, and Downloads including documentation, software drivers, and utility programs.

- **SUPPORT & SERVICES – INDUSTRIAL AUTOMATION**

  Several links from the **Industrial Automation** list take you to additional services such as: Service Program which contains Maintenance Agreements and Warranty Extensions; Repair Centers; On-Line RMA Return Material Authorizations; Technical Support through email or phone; Downloads for additional downloads.

PATENTS

See www.patents.datalogic.com for patent list.

Matrix 450N is covered by one or more of the following patents:

Design patents: EP001950486, JP1462298, USD696707, USD720788, ZL201230182040.4, ZL201230182042.3

Utility patents: EP0996284B1, EP0999514B1, EP1014292B1, EP1128315B1, EP1396811B1, EP1413971B1, EP2517148B1, IT1404187, JP4435343B2, JP4571258B2, US6512218, US6616039, US6808114, US6997385, US7053954, US7387246, US7433590, US8058600, US8289387, US8368000, US8915443, US9268982, US9430689; US9349047, ZL200780053699.6, ZL201280010789.8

LT-03x is covered by one or more of the following patents:

Design patents: EP001950445, JP1468086, USD676595, ZL201230182041.9

Utility patents: EP1128315B1, EP1396811B1, EP1413971B1, US6808114, US6997385, US7387246

COMPLIANCE

For installation, use and maintenance it is not necessary to open the reader.

Only connect Ethernet and dataport connections to a network which has routing only within the plant or building and no routing outside the plant or building.

EMC COMPLIANCE

In order to meet the EMC requirements:

- connect reader chassis to the plant earth ground by means of a flat copper braid shorter than 100 mm;
- for CBX connections, connect the pin "Earth" to a good Earth Ground
- for direct connections, connect your cable shield to the locking ring nut of the connector.

POWER SUPPLY

ATTENTION: READ THIS INFORMATION BEFORE INSTALLING THE PRODUCT

This product is intended to be installed by Qualified Personnel only.

This product is intended to be connected to a UL Listed Direct Plug-in Power Unit marked LPS or “Class 2”.

CE COMPLIANCE

CE marking states the compliance of the product with essential requirements listed in the applicable European directive. Since the directives and applicable standards are subject to continuous updates, and since Datalogic promptly adopts these updates, therefore the EU declaration of conformity is a living document. The EU declaration of conformity is available for competent authorities and customers through Datalogic commercial reference contacts. Since April 20th, 2016 the main European directives applicable to Datalogic products require inclusion of an adequate analysis and assessment of the risk(s). This evaluation was carried out in relation to the applicable points of the standards listed in the Declaration of Conformity. Datalogic Automation products are mainly designed for integration purposes into more complex systems. For this reason it is under the responsibility of the system integrator to do a new risk assessment regarding the final installation.

Warning
This is a Class A product. In a domestic environment this product may cause radio interference in which case the user may be required to take adequate measures.

FCC COMPLIANCE

Modifications or changes to this equipment without the expressed written approval of Datalogic could void the authority to use the equipment.

This device complies with PART 15 of the FCC Rules. Operation is subject to the following two conditions: (1) This device may not cause harmful interference, and (2) this device must accept any interference received, including interference which may cause undesired operation.
This equipment has been tested and found to comply with the limits for a Class A digital device, pursuant to part 15 of the FCC Rules. These limits are designed to provide reasonable protection against harmful interference when the equipment is operated in a commercial environment. This equipment generates, uses, and can radiate radio frequency energy and, if not installed and used in

accordance with the instruction manual, may cause harmful interference to radio communications. Operation of this equipment in a residential area is likely to cause harmful interference in which case the user will be required to correct the interference at his own expense.

EAC COMPLIANCE

Customs Union:
The CU Conformity certification has been achieved; this allows the Product to bear the Eurasian mark of conformity.

LT-03X LASER SAFETY

The LT-03x Series Lighting Systems contain two aiming Laser LEDs used to position the reader.

This product conforms to the applicable requirements of IEC 60825-1 and complies with 21 CFR 1040.10 except for deviations pursuant to Laser Notice N° 50, date June 24, 2007. This product is classified as a Class 2 laser product according to IEC 60825-1 regulations.

CAUTION: Use of controls or adjustments or performance of procedures other than those specified herein may result in exposure to hazardous visible laser light.

Disconnect the power supply when opening the device during maintenance or installation to avoid exposure to hazardous laser light. The laser beam can be switched on or off through a software command.

Produit(s) conforme selon 21CFR 1040.10 sauf des dérogations relatives à la Laser Notice N° 50, date Juin 24, 2007.

Dans le paquet il y a l'étiquette(s) pour les pays où le texte d'avertissement en français sont obligatoires. Le(s) mettre sur le produit à la place de la version anglaise.

Exemple d'étiquettes d'avertissement laser

LT-03X LED SAFETY

LT-03x LED emission according to EN 62471.

HANDLING

The Matrix 450N is designed to be used in an industrial environment and is built to withstand vibration and shock when correctly installed, however it is also a precision product and therefore before and during installation it must be handled correctly to avoid damage.

- avoid that the readers are dropped (exceeding shock limits).

NO

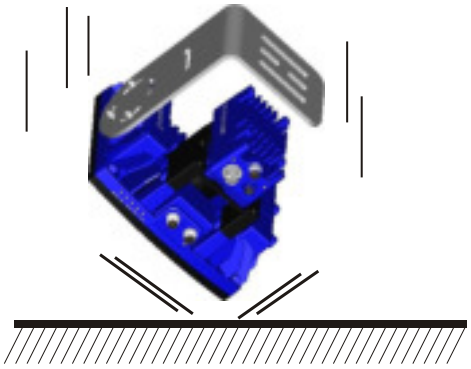

- do not fine tune the positioning by striking the reader or bracket.

NO

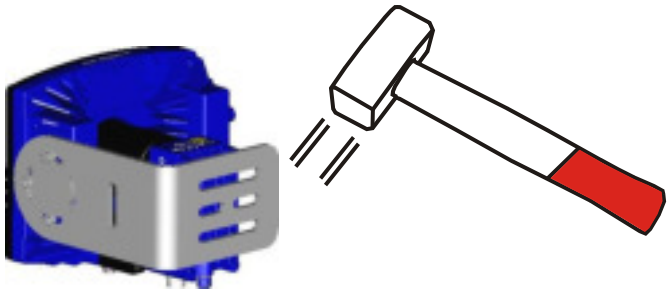

- do not weld the reader into position which can cause electrostatic, heat or reading window damage.

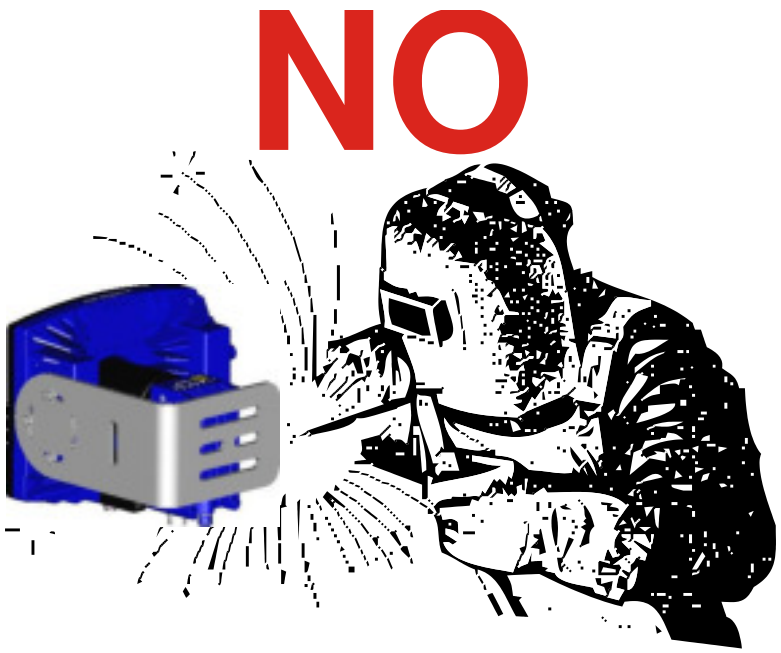

- do not spray paint near the reader which can cause reading window damage.

GENERAL VIEW

Matrix 450N + LT-03x

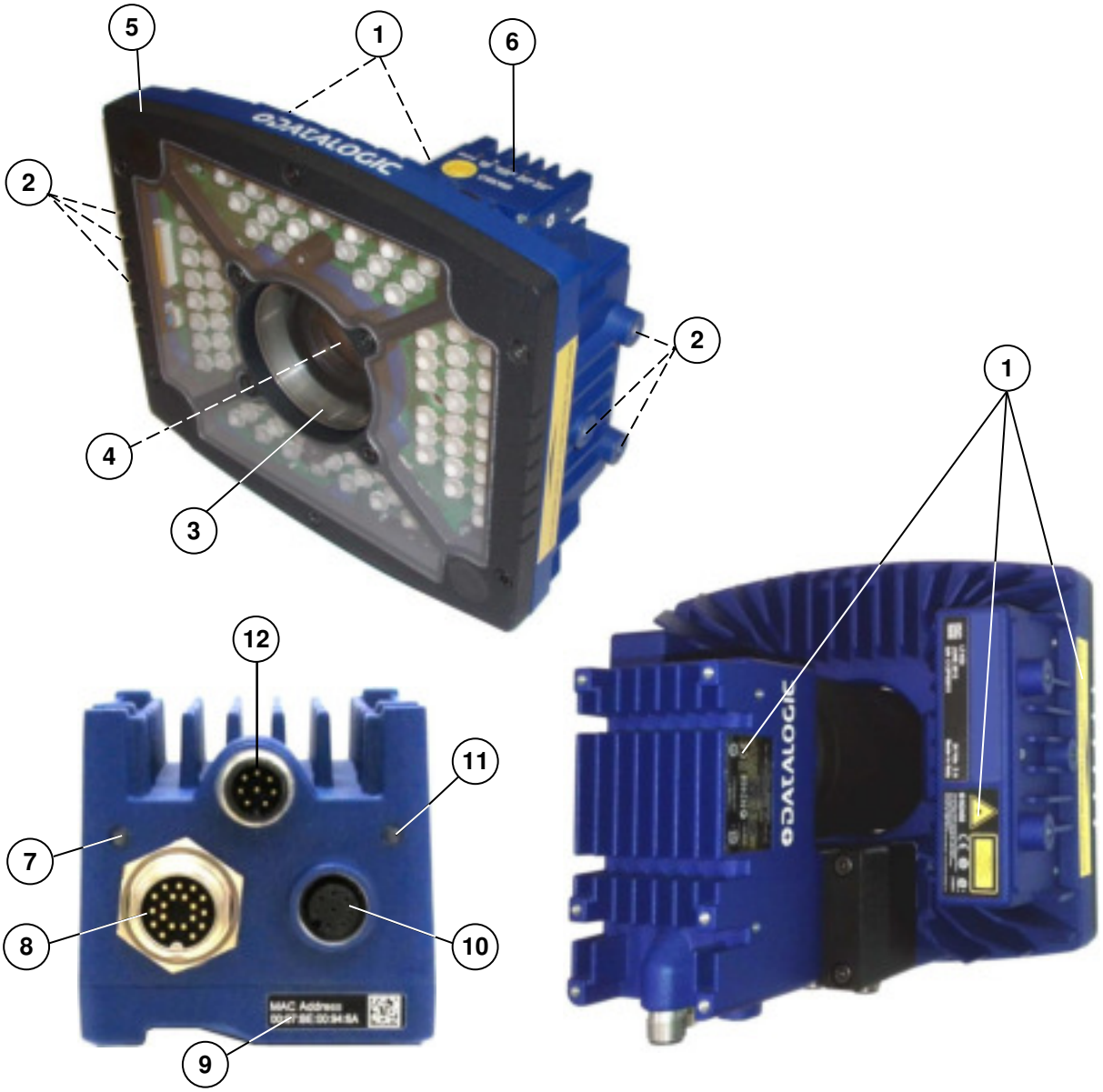

Figure A

1	Device Class and Warning Labels	7	Power On LED
2	Bracket Mounting Holes (6)	8	Power - Serial - I/O Connector
3	Lens Cover	9	MAC Address Label
4	Lens (separate accessory)	10	Ethernet Connector
5	LT-03x Lighting System (separate accessory)	11	Ethernet Connection LED
6	HMI X-PRESS™ Interface	12	Lighting System Signal - Power Connector

1 RAPID CONFIGURATION

STEP 1 – ASSEMBLE THE READER

The first step to perform is to assemble the accessories that make up the Matrix 450N reader. The lens and lighting system or external illuminator must be used. This procedure shows an LT-03x series lighting system.

CAUTION: Matrix 450N must be disconnected from the power supply during this procedure.

1. In a dust-free environment, remove the Matrix 450N Lens Cover by unscrewing it.

CAUTION: Do not touch the sensor aperture, lens glass or lens cover glass. These areas must be kept clean. Avoid any abrasive substances that might damage these surfaces during cleaning.

2. Remove the sensor protection label by pulling it off of the base.

3. Mount the LNS-12xx lens by slowly screwing it onto the base until it arrives at the mechanical stop.

NOTE: The lens mount is equipped with a special slip mechanism and together with the LT-03x design facilitates the focusing procedure during installation, for example if the locking knobs on the lens are obstructed by the body of the illuminator. See note in Step 4 "Focusing the Reader" or Step 8.

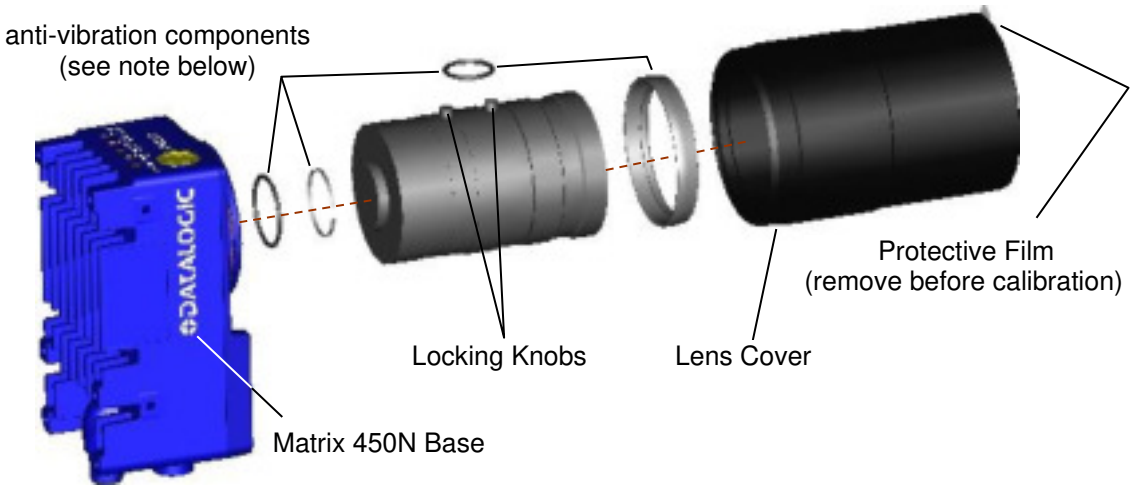

Figure 1 – Assembling Matrix 450N and LNS-12xx Lens

NOTE: The anti-vibration components are already mounted to all Datalogic LNS-12xx Lenses.

4. To keep dust and dirt off of the lens during mounting, temporarily replace the lens cover.

Short lens versions (LNS-1235 and LNS-1250) have an added anti-vibration gasket shown in the figure below:

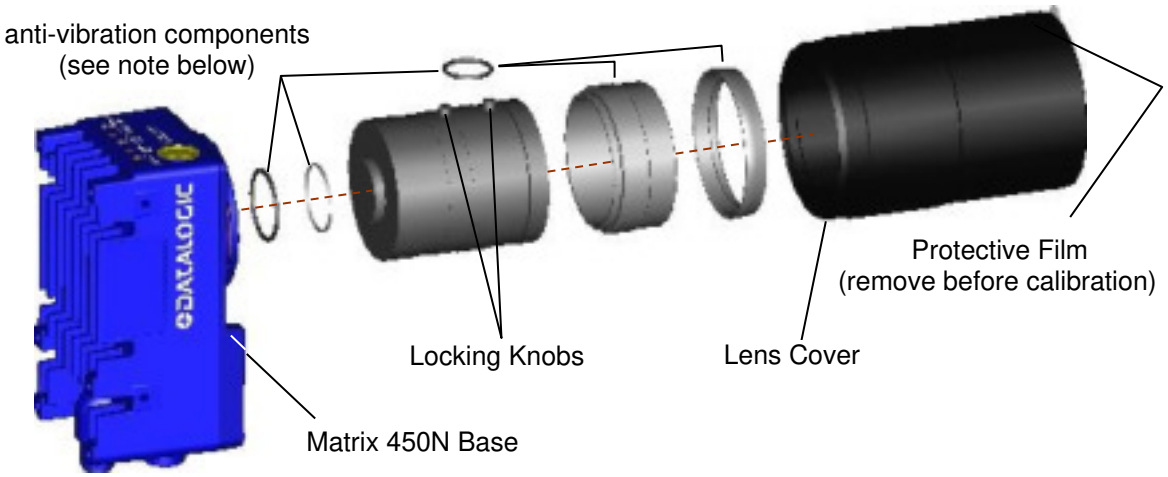

Figure 2 – Assembling Matrix 450N and LNS-12xx Lens

NOTE: The anti-vibration components are already mounted to all Datalogic LNS-12xx Lenses.

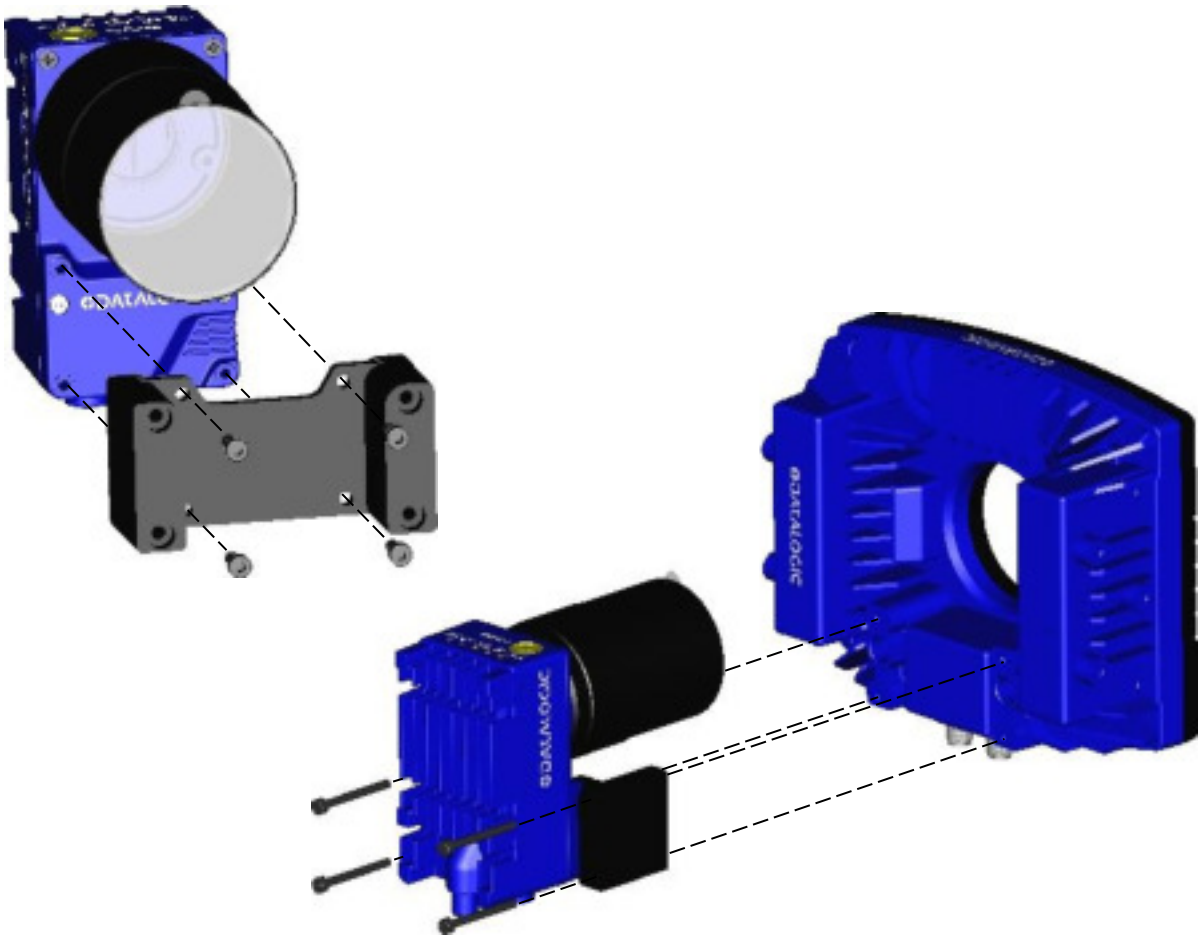

Figure 3 – Assembling Matrix 450N to LT-03x

NOTE: The mating bracket can be mounted in the reverse direction to create a compact version of the Matrix 450N + LT-03x assembly. The compact assembly however will reduce access to the lens for the focusing procedure.

REQUIRED ACCESSORIES

The following table shows the correct lens/illuminator combinations to be used for Matrix 450N imager assembly.

Lenses			Illuminators		
93ACC0041	LNS-1216	16 mm C-Mount Lens 5MP with anti-vibration components	93A400034	LT-032	ULTRA POWER LT NARROW BLUE 40°
93ACC0034	LNS-1225	25 mm C-Mount Lens 5MP with anti-vibration components	93A400032	LT-030	ULTRA POWER LT SUPERNARROW BLUE 20°
			93A400033	LT-031	ULTRA POWER LT SUPERNARROW WHITE 20°
			93A400034	LT-032	ULTRA POWER LT NARROW BLUE 40°
93ACC0035	LNS-1235	35 mm C-Mount Lens 5MP with anti-vibration components	93A400032	LT-030	ULTRA POWER LT SUPERNARROW BLUE 20°
			93A400033	LT-031	ULTRA POWER LT SUPERNARROW WHITE 20°
93ACC0036	LNS-1250	50 mm C-Mount Lens 5MP with anti-vibration components	93A400032	LT-030	ULTRA POWER LT SUPERNARROW BLUE 20°
			93A400033	LT-031	ULTRA POWER LT SUPERNARROW WHITE 20°

STEP 2 – CONNECT THE SYSTEM

To connect the system in a Stand Alone configuration, you need the hardware indicated in Figure 4. In this layout the data is transmitted to the Host on the on-board Gigabit Ethernet interface. Data can also be transmitted independently onto other output channels for data monitoring (i.e. auxiliary or main serial interfaces).

When One Shot or Phase Mode Operating mode is used, the reader is activated by an External Trigger (photoelectric sensor) when the object enters its reading zone.

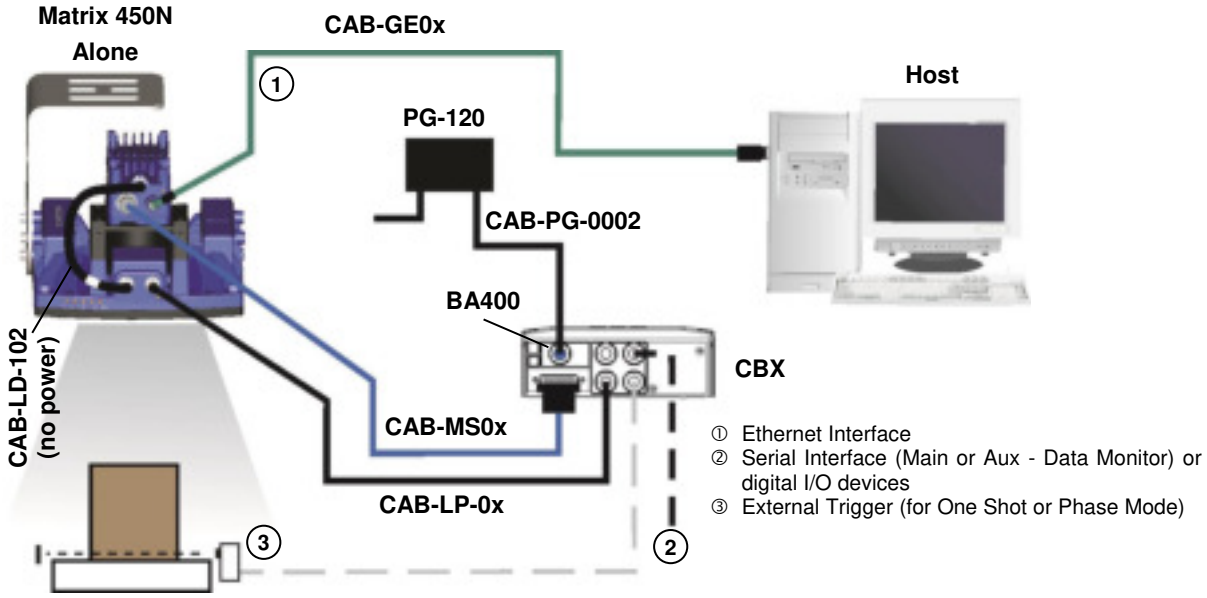

Figure 4 – Matrix 450N in Stand Alone Layout with CBX to Ethernet Host

- **Power Supply Connection**
  Use the PG-120 power Kit (3 versions for European, UK or US plug) and CAB-PG-0002 + BA400 connector to connect the PG-120 to the CBX. An alternative power supply to the PG-120 is the PWR-120.

- **CBX Connection**
  Use CAB-LP-0x to supply power from the CBX to the LT-03x. Connect the Brown/White wires to Vdc and Black/Blue wires to GND. Connect the cable shield to Earth ground.

  Use CAB-MS0x between Matrix 450N and the CBX for: Matrix 450N power, external trigger device (photocell), optional serial interface and additional I/O connections.

  Use the CAB-GE0x for the Gigabit Ethernet connection towards a remote host or Datalogic WebSentinel™ monitoring station.

- **Matrix 450N LT-03x Connection**
  Use the CAB-LD-102 (no power) cable (provided with the LT-03x), to connect the communication signals between the Matrix 450N and the LT-03x while isolating the power. Through the CBX internal power switch you can control power to the Matrix 450N independently from the LT-03x.

NOTE: Matrix 450N does not support sourcing power towards the CBX in order to power I/O devices. These devices must be powered through the CBX or from an external source.

Alternatively, if an external trigger or other I/O devices are not necessary, the layout is simplified: The LT-03x is powered directly from the PG-120 through the CAB-PG-0105 cable. The CAB-LD-002 (with power) cable (provided with the LT-03x), is used to supply power to the Matrix 450N from the LT-03x. Matrix 450N connects directly to the Ethernet host through the Gigabit Ethernet connection (CAB-GE0x).

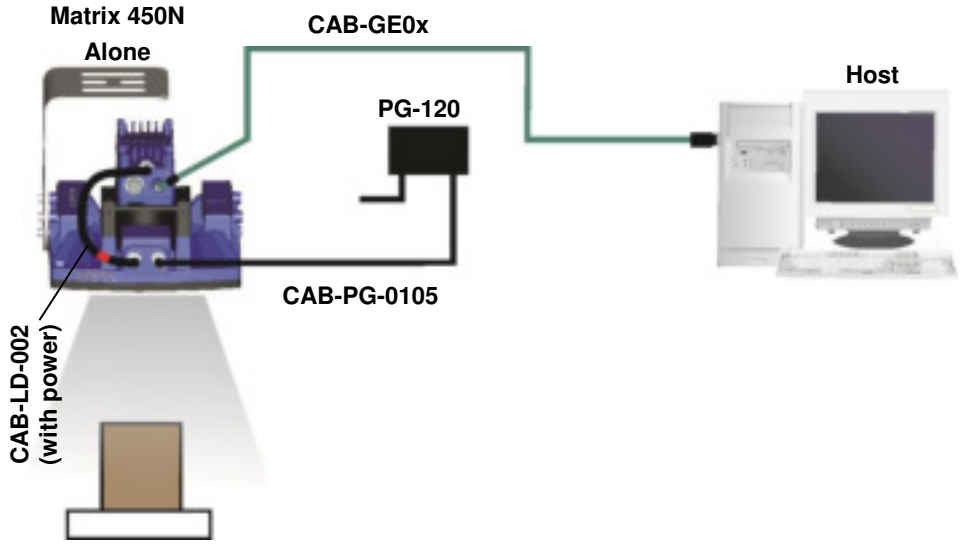

Figure 5 - Matrix 450N™ in Stand Alone Layout without CBX to Ethernet Host

Matrix 450N + LT-03x can also be used in an ID-NET™ Master/Slave configuration. See Chapter 5 of this Reference Manual for details, and par. 4.1.1 or Appendix **A** for power supply recommendations.

NOTE: If using separate power sources for LT-03x and Matrix 450N, make sure that LT-03x is powered up before Matrix 450N in order to be correctly recognized.

CBX100/CBX500 Pinout for Matrix 450N

The table below gives the pinout of the CBX100/CBX500 terminal block connectors. Use this pinout when the Matrix 450N reader is connected by means of the CBX100/CBX500:

CBX100/500 Terminal Block Connectors			
Input Power		**Outputs**	
Vdc	Power Supply Input Voltage +	+V	Power Source - Outputs
GND	Power Supply Input Voltage -	-V	Power Reference - Outputs
Earth	Protection Earth Ground	O1+	Output 1 +
		O1-	Output 1 -
Inputs		O2+	Output 2 +
+V	Power Source – External Trigger	O2-	Output 2 -
I1A	External Trigger A (polarity insensitive)	**Auxiliary Interface**	
I1B	External Trigger B (polarity insensitive)	TX	Auxiliary Interface TX
-V	Power Reference – External Trigger	RX	Auxiliary Interface RX
+V	Power Source – Inputs	SGND	Auxiliary Interface Reference
I2A	Input 2 A (polarity insensitive)	**ID-NET™**	
I2B	Input 2 B (polarity insensitive)	REF	Network Reference
-V	Power Reference – Inputs	ID+	ID-NET network +
Shield		ID-	ID-NET network -
Shield	Network Cable Shield		

Main Interface		
	RS232	**RS422 Full-Duplex**
	TX	TX+
	-	TX-
	RX	*RX+
	-	*RX-
	SGND	SGND

* Do not leave floating, see par. 4.2.2 for connection details.

CAUTION: Do not connect GND, SGND and REF to different (external) ground references. GND, SGND and REF are internally connected through filtering circuitry which can be permanently damaged if subjected to voltage drops over 0.8 Vdc.

STEP 3 – MOUNT AND POSITION THE READER

1. To mount the Matrix 450N + LT-03x assembly, use the L-shaped mounting bracket to obtain the most suitable position for the reader. The most common mounting configurations are shown in the figure below. Other mounting solutions are provided in Chapter **Error! Reference source not found.** of this Reference Manual.

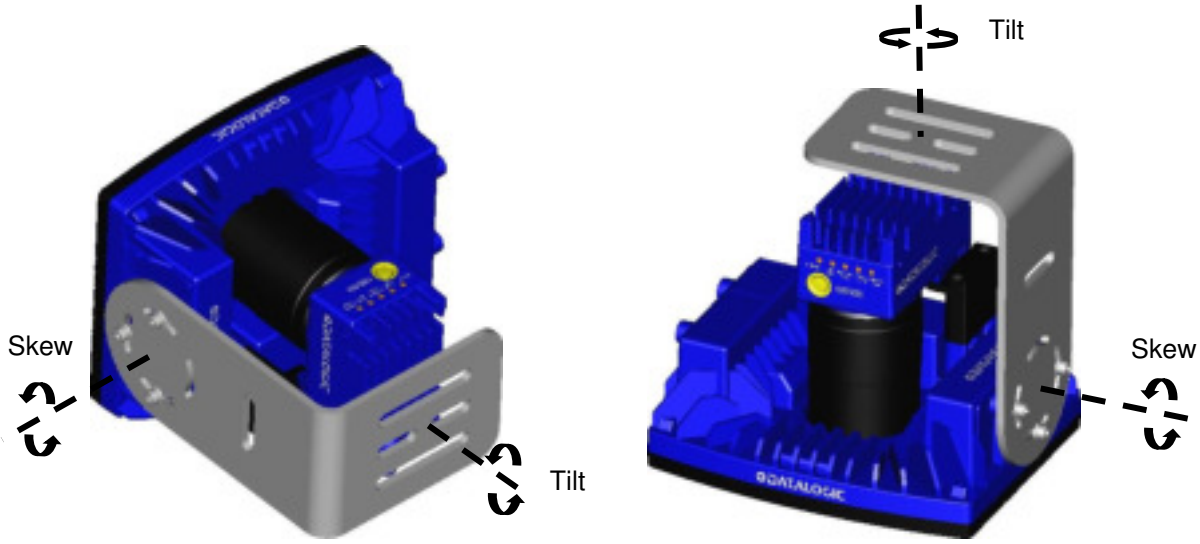

Figure 6 –Positioning with LT-03x L-shaped Mounting Bracket

CAUTION: Do not mount the Matrix 450N + LT-03x assembly with the Matrix 450N body mounting bracket accessory. The body mounting bracket is not designed to support the LT-03x.

2. When mounting the Matrix 450N + LT-03x assembly, take into consideration these three ideal label position angles: **Pitch or Skew 10° to 20° and Tilt 0°**, although the reader can read a code at any tilt angle. Assure at least 10° Pitch or Skew to avoid direct illuminator light reflection which will reduce performance.

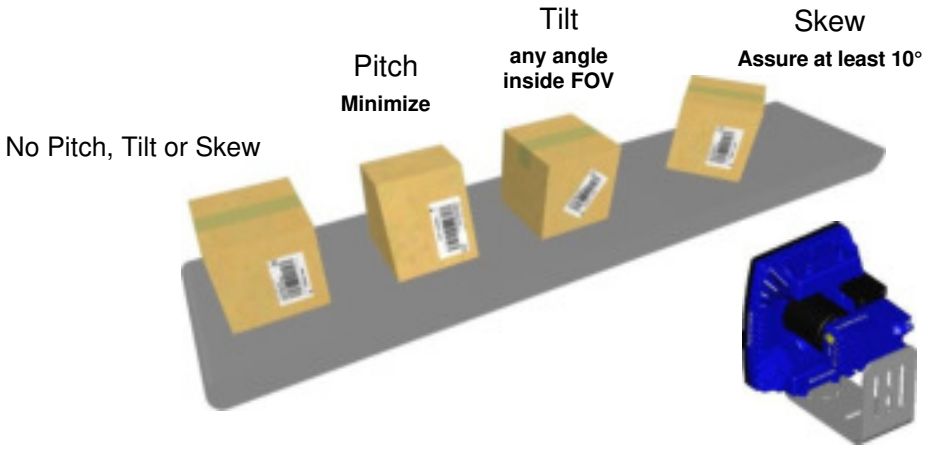

Figure 7 – Pitch, Skew and Tilt Angles

3. Refer to the Reading Diagrams in par. 6.2 to determine the correct reading distance according to your application requirements.

NOTE: Rapid Configuration of the Matrix 450N reader can be made **either** through the X-PRESS™ interface (steps 4-6) which requires no PC connection, **or** by using the DL.CODE configuration tool (steps 7-8). Select the procedure according to your needs.

Both the X-PRESS interface and the DL.CODE configuration tool provide easy setup methods valid for single code applications with uniform labels that do not require reading at the extreme ends of the reading ranges shown in the diagrams.

For advanced applications including those that operate at the extreme ends of the reading ranges, use the DL.CODE configuration tool.

STEP 4 – FOCUS THE READER

Matrix 450N provides a built-in tool called Blue Diamonds™ to aid focusing the reader. The Blue Diamonds are accessed through the X-PRESS Interface.

1. Remove the lens cover in order to focus the reader.

2. Prepare the correct accessory lens for your application:

NOTE: Once the lens is fully tightened to the mechanical stop (Step 1), it can be rotated counterclockwise (up to one full turn without loosening the lens), so that the diaphragm scale and locking knobs can be easily accessed from behind the LT-03x.

   a. Remove the anti-vibration o-ring from the two Locking Knobs on the lens and loosen them.

   b. Adjust the Focus ring to the "**Far position**" and the Diaphragm ring to the "**F2.8**" number setting which is the preferred setting for installation using the X-PRESS interface.

3. Power the reader on. During the reader startup (reset or restart phase), all the LEDs blink for one second. On the connector side of the reader near the cable, the “POWER ON” LED (blue) indicates the reader is correctly powered.

4. Enter the Focus function by pressing and holding the X-PRESS push button until the Focus LED is on.

5. Release the button to enter the Focus function. The Blue Diamonds and laser pointers turn on.

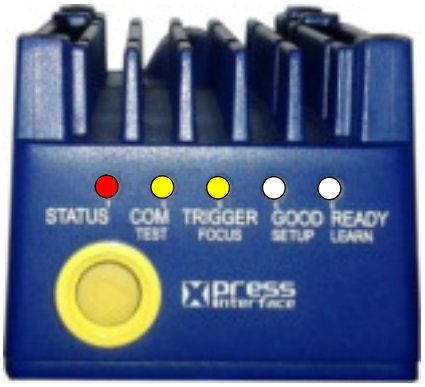

Figure 8 – X-PRESS™ Interface: Focus Function

NOTE: If the reading surface is too dark, in order to increase the contrast, it may be helpful to place a piece of white paper at the Blue Diamonds positions to see them better.

The procedure is as follows:

a. At the correct reading distance (see the Reading Diagrams in Chapter **Error! Reference source not found.** of this Reference Manual), adjust the Focus ring towards the "Near position" until the Blue Diamonds are perfectly in focus, see Figure 9.

b. At long focal distances a "skew" angle may cause a noticeable difference in focus between the two diamonds, in this case select the best possible focus (both diamonds slightly out of focus). Tighten the Focus Locking Knob.

c. Set the Diaphragm to the aperture stop (F-number) stated in the conditions relative to the selected reading diagram and then tighten the Diaphragm Locking Knob.

d. Replace the anti-vibration o-ring onto the two Locking Knobs.

NOTE: If necessary you can use the Focusing Tool in the DL.CODE Image Setup step for fine focusing. See Step 8.

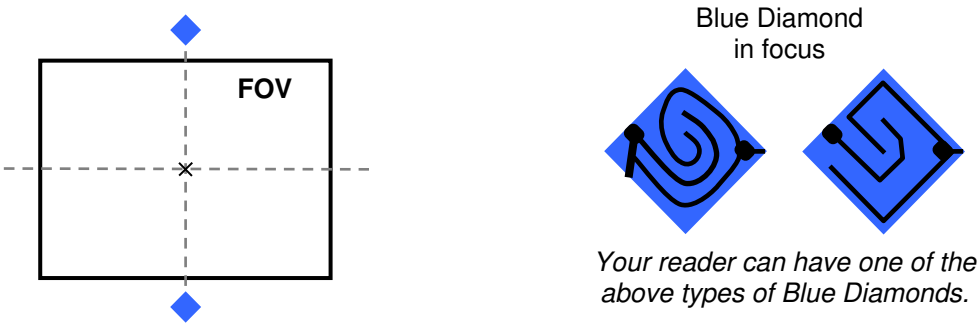

Figure 9 – Focus Function Using Blue Diamonds

6. Exit the Focus function by pressing the X-PRESS push button once. The Blue Diamonds and laser pointers turn off.
7. Replace the lens cover, screwing it tightly to the base.

STEP 5 – CALIBRATE IMAGE DENSITY

In order to function correctly to the fullest extent of its capabilities, Matrix 450N must acquire information regarding image density or PPI (pixels per inch). This calibration takes place through the X-PRESS Interface and the **Focusing and PPI Setup Chart** included in the package. This procedure is necessary for the first time installation, if the lens type is changed or if the focal distance is changed.

Locate

1. Enter the Focus function by pressing and holding the X-PRESS push button until the Focus LED is on.

2. Release the button to enter the Focus function. The Blue Diamonds and laser pointers turn on.

Figure 10 – X-PRESS™ Interface: Locate Function

3. From the **Focusing and PPI Setup Chart**, position the 1 mm code at the center of the Horizontal FOV (aligned with the laser pointers).

Figure 11 –Aligning the Focusing and PPI Setup Chart Using Laser Pointers as Reference

4. Exit the Focus function by pressing the X-PRESS push button once. The Blue Diamonds and laser pointers turn off.

Setup

5. Enter the Setup function by pressing and holding the X-PRESS push button until the Setup LED is on.

6. Release the button to enter the Setup function. The Setup LED will blink until the procedure is completed.

   The Setup procedure ends when the Image Acquisition parameters are successfully saved in the reader memory, the Setup LED will stop blinking and Matrix 450N emits 3 high pitched beeps.

   If the calibration cannot be reached after a timeout of about 5 (five) seconds Matrix 450N will exit without saving the parameters to memory, the Setup LED will stop blinking and in this case Matrix 450N emits a long low pitched beep.

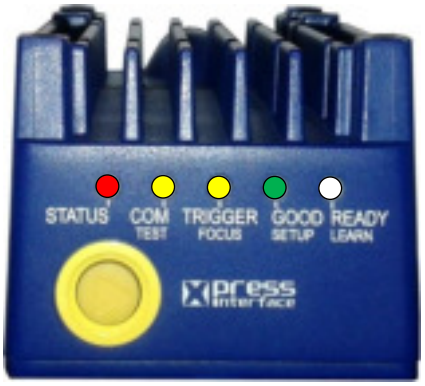

Figure 12 – X-PRESS™ Interface: Setup Function

Learn

7. Enter the Learn function by pressing and holding the X-PRESS push button until the Learn LED is on.

8. Release the button to enter the Learn function. The Learn LED will blink until the procedure is completed.

   The Learn procedure ends when the Image Density value is successfully saved in the reader memory, the Learn LED will stop blinking, the Green Spot is activated and Matrix 450N emits 3 high pitched beeps.

   If the calibration cannot be reached after a timeout of about 3 (three) minutes Matrix 450N will exit without saving the parameters to memory, the Learn LED will stop blinking and in this case Matrix 450N emits a long low pitched beep.

Figure 13 – X-PRESS™ Interface: Learn Function

NOTE: You can always exit from any X-PRESS function at any time by pressing the X-PRESS push button once. After a short delay the procedure is cancelled.

STEP 6 – X-PRESS CONFIGURATION

Once Matrix 450N has calibrated image density, you can configure it for optimal code reading relative to your application. This configuration can be performed either through the X-PRESS Interface or the DL.CODE configuration program.

Locate

1. Enter the Focus function by pressing and holding the X-PRESS push button until the Focus LED is on.

2. Release the button to enter the Focus function. The Blue Diamonds and laser pointers turn on.

3. **Select a code from your application**. Position the code at the center of the Horizontal FOV (aligned with the laser pointers).

4. Exit the Focus function by pressing the X-PRESS push button once. The Blue Diamonds and laser pointers turn off.

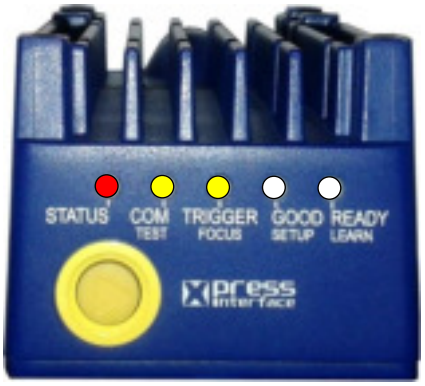

Figure 14 – X-PRESS™ Interface: Locate Function

Setup

5. Enter the Setup function by pressing and holding the X-PRESS push button until the Setup LED is on.

6. Release the button to enter the Setup function. The Setup LED will blink until the procedure is completed.

   The Setup procedure ends when the Image Acquisition parameters are successfully saved in the reader memory, the Setup LED will stop blinking and Matrix 450N emits 3 high pitched beeps.

   If the calibration cannot be reached after a timeout of about 5 (five) seconds Matrix 450N will exit without saving the parameters to memory, the Setup LED will stop blinking and in this case Matrix 450N emits a long low pitched beep.

Figure 15 – X-PRESS™ Interface: Setup Function

Learn

7. Enter the Learn function by pressing and holding the X-PRESS push button until the Learn LED is on.

8. Release the button to enter the Learn function. The Learn LED will blink until the procedure is completed.

   The Learn procedure ends when the Image Processing and Decoding parameters for **a single code** are successfully saved in the reader memory, the Green Spot is activated, the Learn LED will stop blinking, and Matrix 450N emits 3 high pitched beeps[1].

   If the autolearning cannot be reached after a timeout of about 3 (three) minutes Matrix 450N will exit without saving the parameters to memory, the Learn LED will stop blinking and in this case Matrix 450N emits a long low pitched beep.

Figure 16 – X-PRESS™ Interface: Learn Function

NOTE: The Grade A Barcode Test Chart (or the Focusing and PPI Setup Chart) cannot be used to set the Code 128 symbology (even though the reader successfully reads the code). Use the application specific code if you need to set this symbology.

NOTE: When using X-PRESS or the BM150 menu to perform the Auto-learn, only **a single code** can be configured (successive Learns will substitute the current code). To configure multiple code symbologies, use the DL.CODE Auto-learn procedure.

NOTE: You can always exit from any X-PRESS function at any time by pressing the X-PRESS push button once. After a short delay the procedure is cancelled.

NOTE: If you have used this procedure to configure Matrix 450N go to step 9.

[1] *The Learn procedure will not recognize the following symbologies: Postal Codes, Pharmacode, MSI, Standard 2 of 5, Matrix 2 of 5.*

Reset Reader to Factory Default Environment (Optional)

If it ever becomes necessary to reset the reader's Environment parameters to their factory default values, you can perform this procedure by holding the X-PRESS push button pressed while powering up the reader. **You must keep the X-PRESS push button pressed until all LEDs blink simultaneously for about 3 seconds. Release and re-press the button during this LED blinking sequence**.

All the device's Environment parameters are reset including the default IP Address. The Matrix 450N emits 3 high pitched beeps and after a few seconds enters run mode.

Any previously saved configurations on the device will remain in memory, but the Default configuration is set as the startup configuration.

NOTE: If you release the button while the LEDs are all fixed on (after the blinking phase), the reader will enter the Loader program sequence and the LEDs will begin to cycle through various patterns. Just cycle power to return to run mode.

STEP 7 – INSTALLING DL.CODE CONFIGURATION PROGRAM

DL.CODE is a Datalogic reader configuration tool providing several important advantages:

- Intuitive Graphical User Interface for rapid configuration;
- Defined configuration directly stored in the reader;
- Discovery and IP address setting features to facilitate remote configuration
- Device Monitoring

To install DL.Code:

1. On the PC that will be used for configuration, (running Windows XP, 7, 8, or 10), download the DL.CODE mini-DVD .zip file. Extract the files maintaining the folder structure and run the **start.hta** file to access the installation pop-up. Click on the **Install DL.CODE** link to run the installation program and follow the installation procedure.
2. When the installation is complete the DL.CODE entry is created in the Start>Programs bar under “Datalogic” as well as a desktop icon. Double-click the desktop icon to run it.

This configuration procedure assumes a laptop computer, running DL.CODE, is connected to a factory default reader through the Ethernet port.

Device Discovery

The User Interface opens and displays a list of all the devices belonging to the Local Area Network. DL.CODE has a discovery feature to accomplish this task.

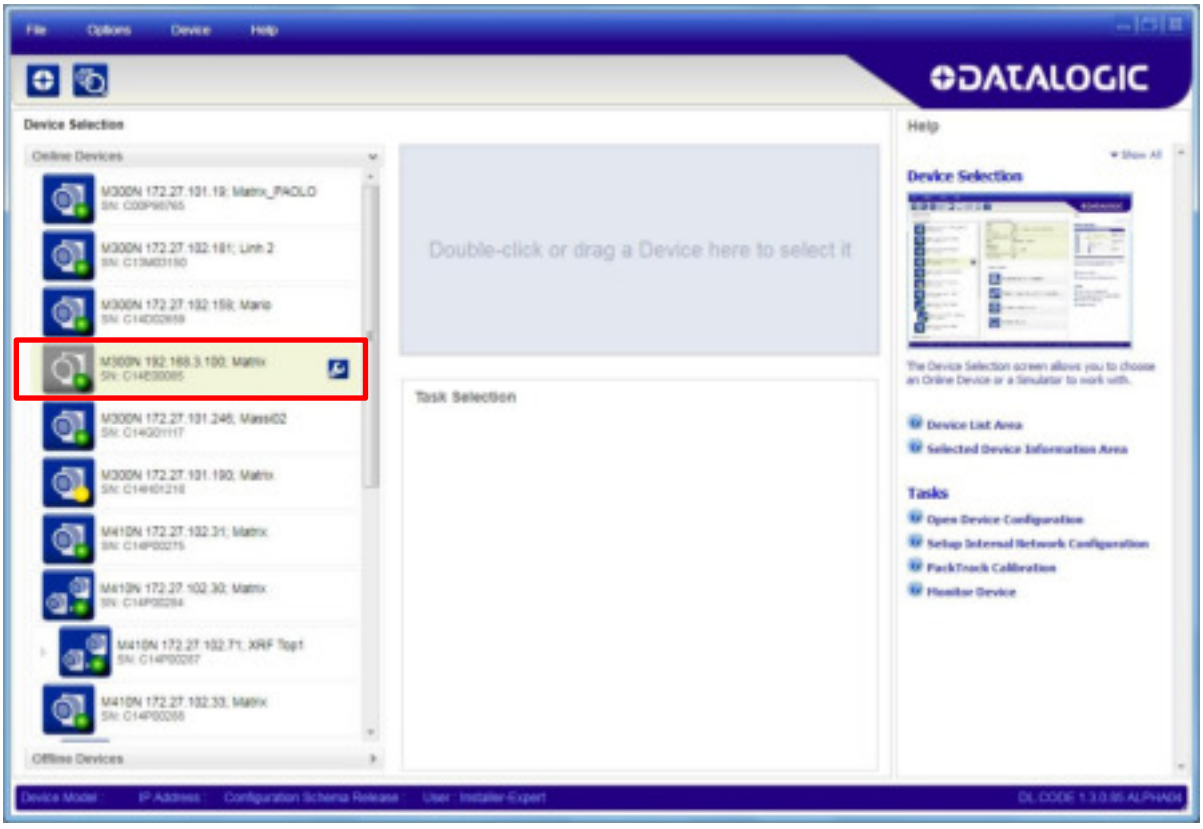

Figure 17 – Device Discovery

The discovery feature will also show devices not belonging to the LAN and display them in grey (see Figure 17).

3. First the device must be added to the LAN by aligning its IP Address to the network. The network administrator should provide valid LAN address(es).

4. Find your device in the list by matching its serial number (SN) then click on the device wrench icon to open the Device Environment Configuration window.

5. Change the Ethernet Settings (IP Address, Subnet Mask, Gateway Address etc.) according to the network requirements.

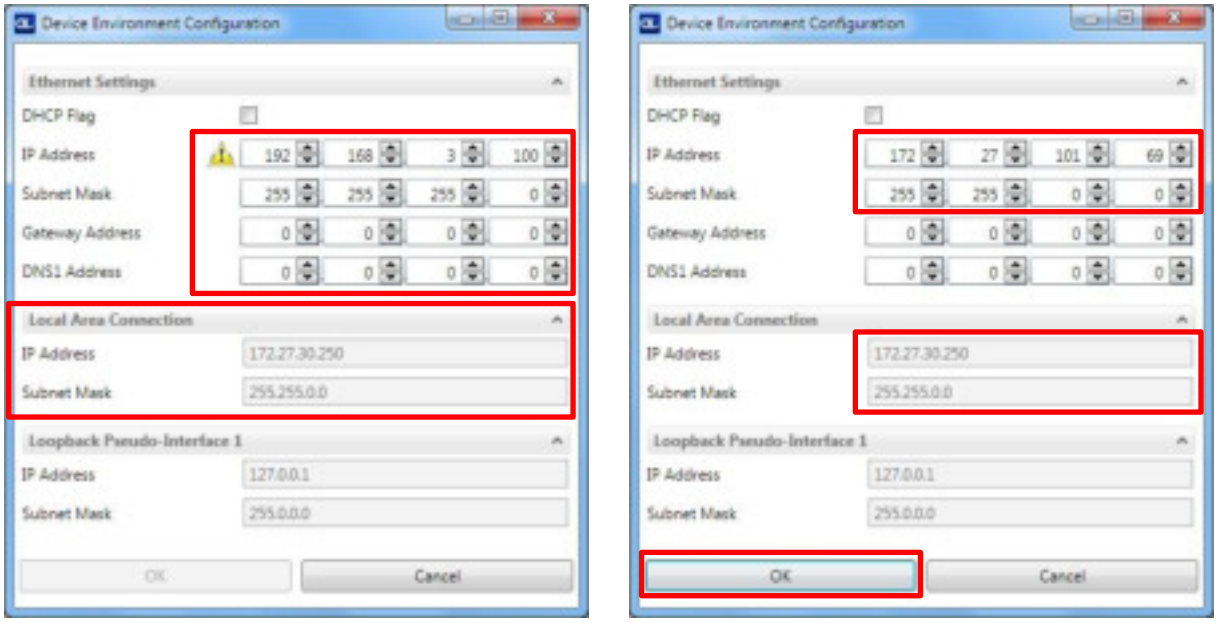

Figure 18 - Device Environment Configuration Window

6. Click OK; the device will reappear in the list of Online Devices (in color) meaning it is now part of the LAN and can be configured. The new IP address will also be displayed.

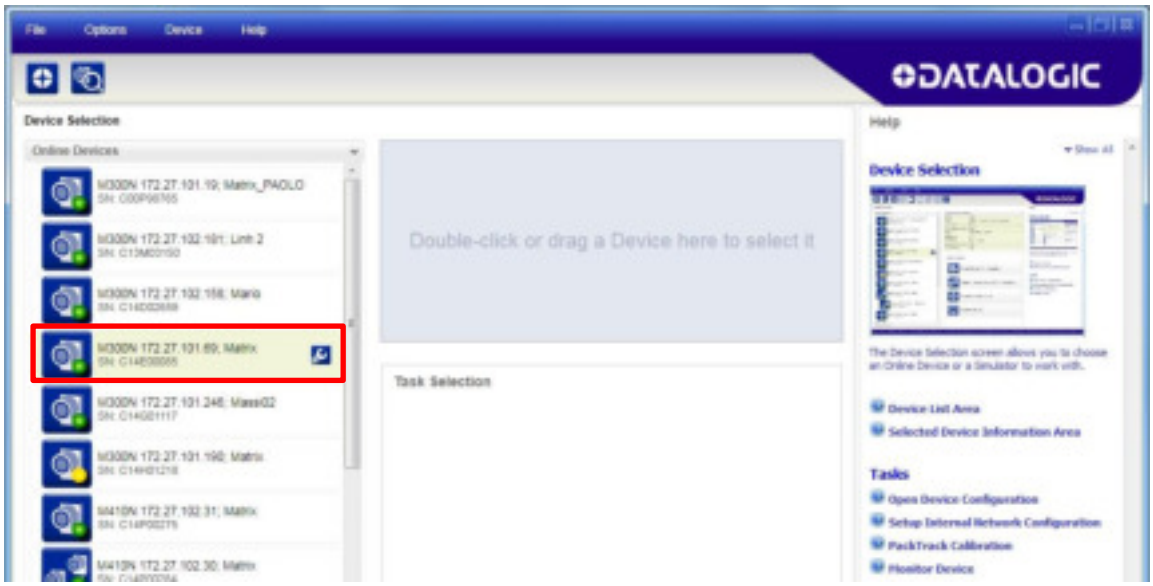

7. Double-click on or drag the device icon into the Selected Device Information Area. Details about the device will be displayed in this area.

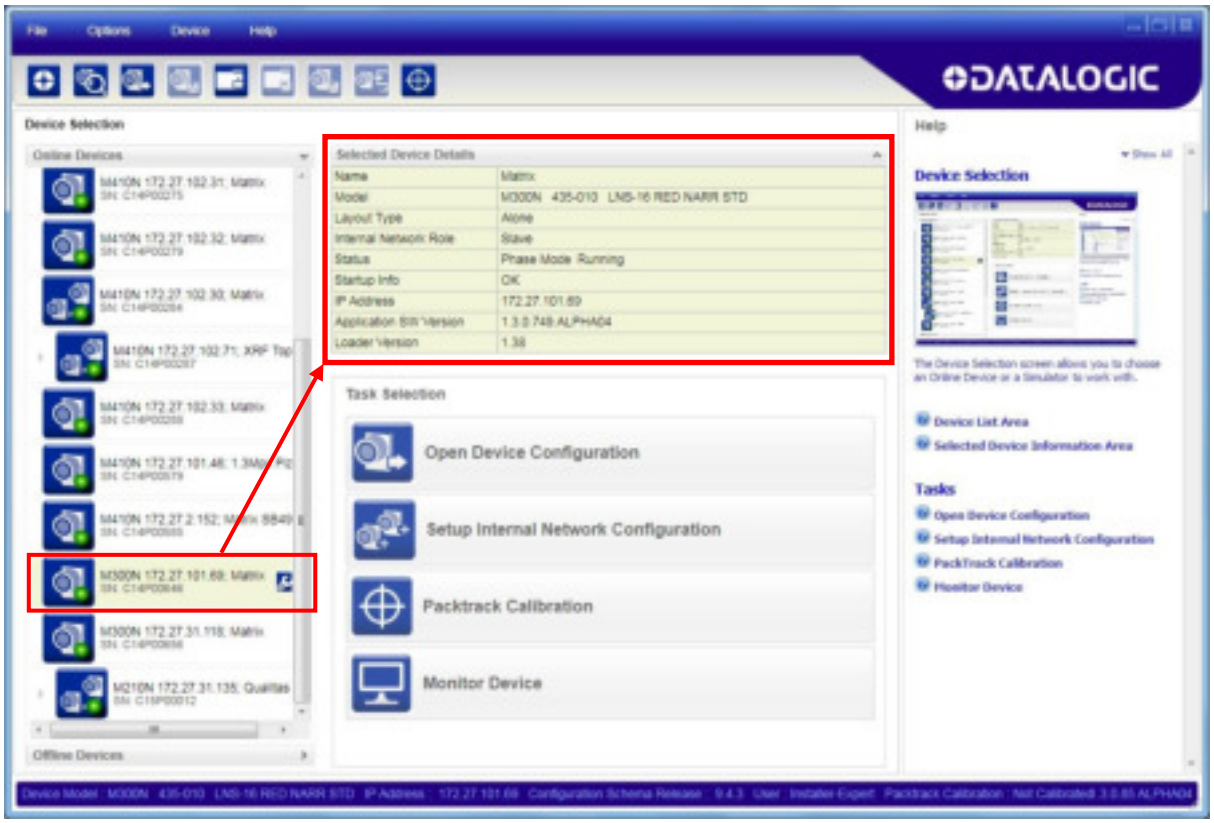

Figure 19 – DL.CODE Opening Window

STEP 8 – DEVICE CONFIGURATION

Image Setup

To begin configuration, the reader must be correctly mounted at the correct reading distance for your application so that its Field of View covers the application reading area.

1. From the Task Area select Open Device Configuration. The device enters run mode and begins acquiring images.

2. The Open Device Configuration window opens showing the list of currently saved configurations (jobs) saved on the device. For new devices, the only saved job is the Default configuration. Click OK. The device enters run mode and begins acquiring images.

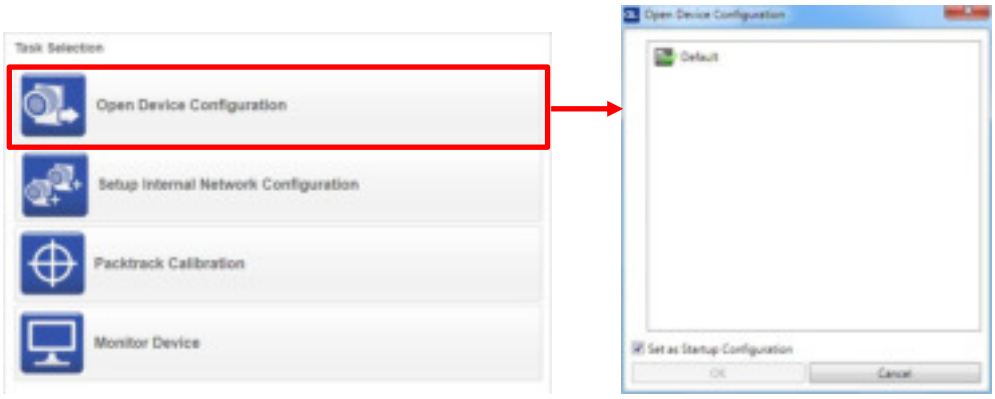

3. Place the **Grade A Barcode Test Chart** in the reading area. Once positioned, stop image acquisition by clicking on the Pause button.

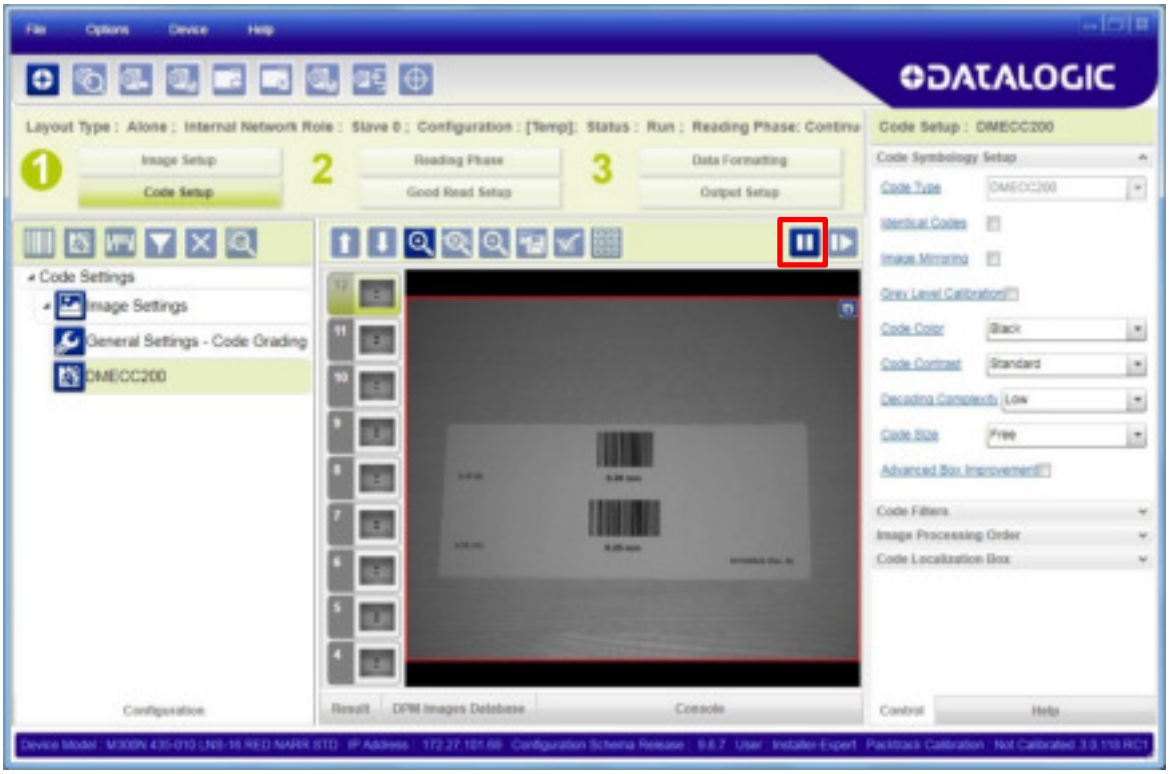

4. Click the Image Setup button and then click the Image Auto Setup button to automatically acquire the best exposure time and gain values.

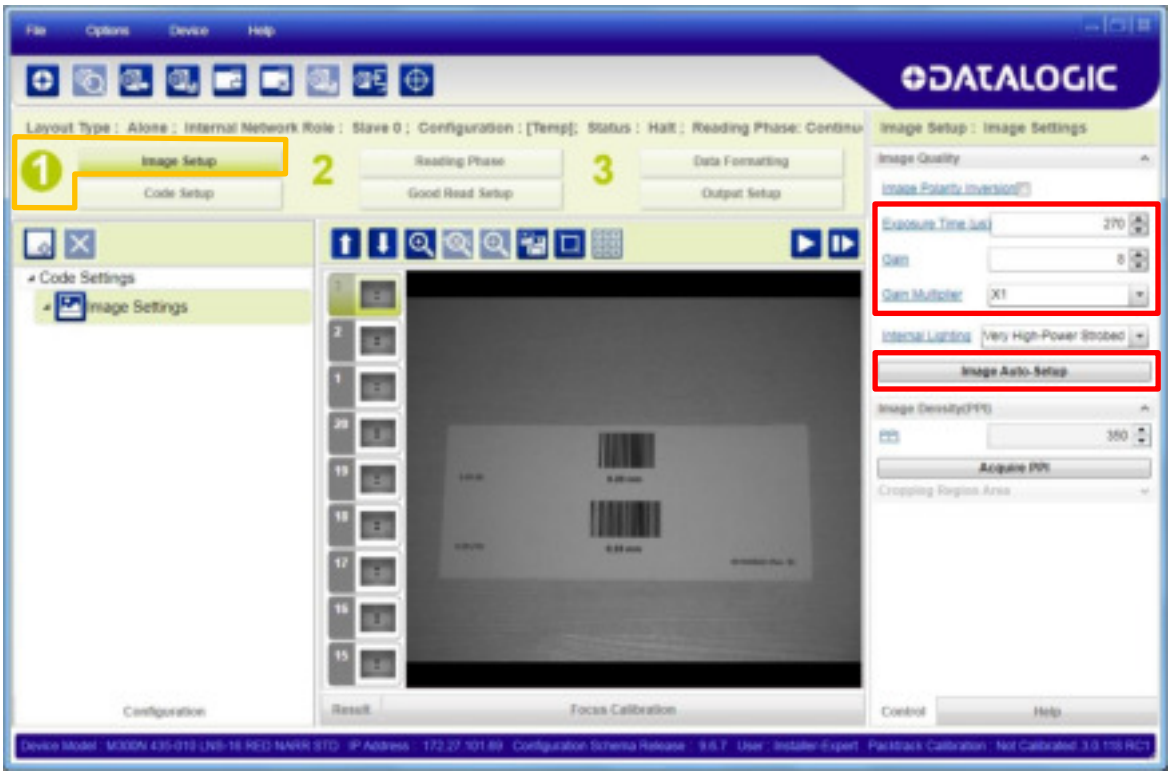

5. Select the Static or Dynamic Self-Tuning option; Start Autolearn and Apply to the Image Setup.

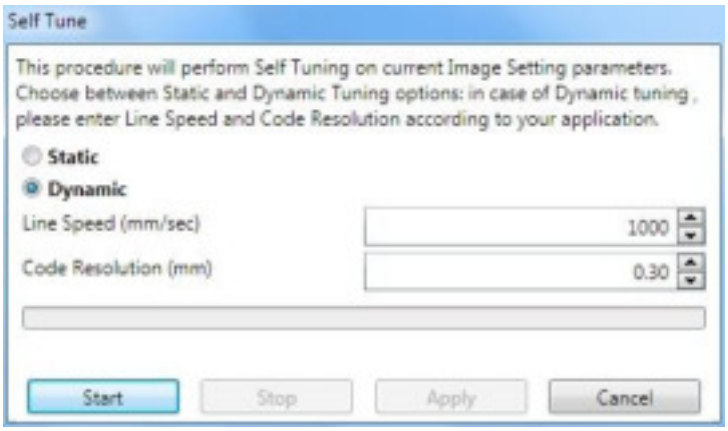

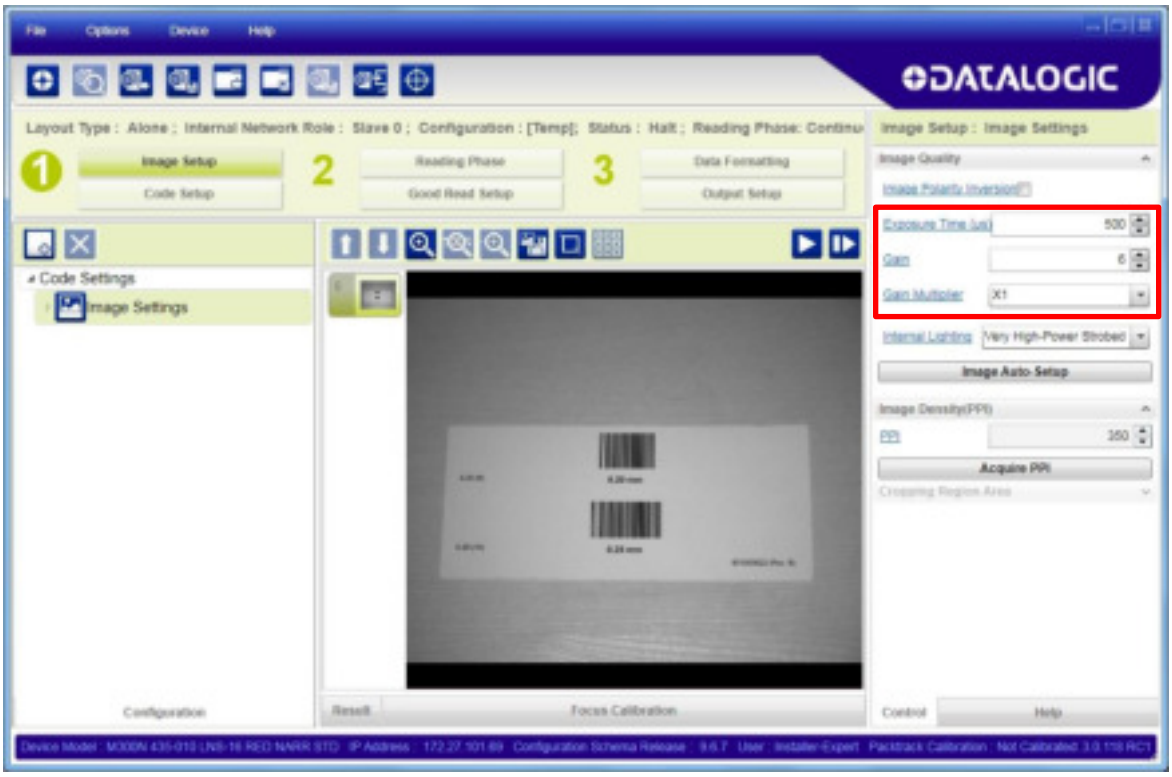

NOTE: For applications having multiple lighting or code reading conditions, up to 10 different Image Setups can be configured by adding them with the icon.

For the next step you need to enable the Focus Calibration Tool from the Options>UI Settings Configuration tab if not already enabled.

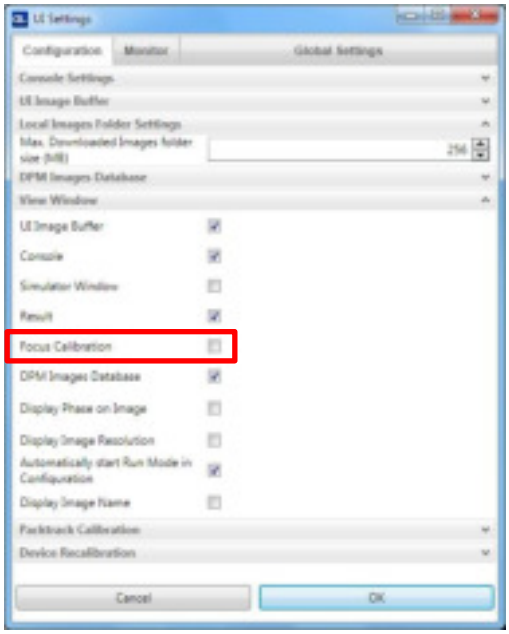

6. Now click on the Focus Calibration tab at the bottom of the window. The oscilloscope view is shown in the bottom panel and can be used for manual focus adjustment.

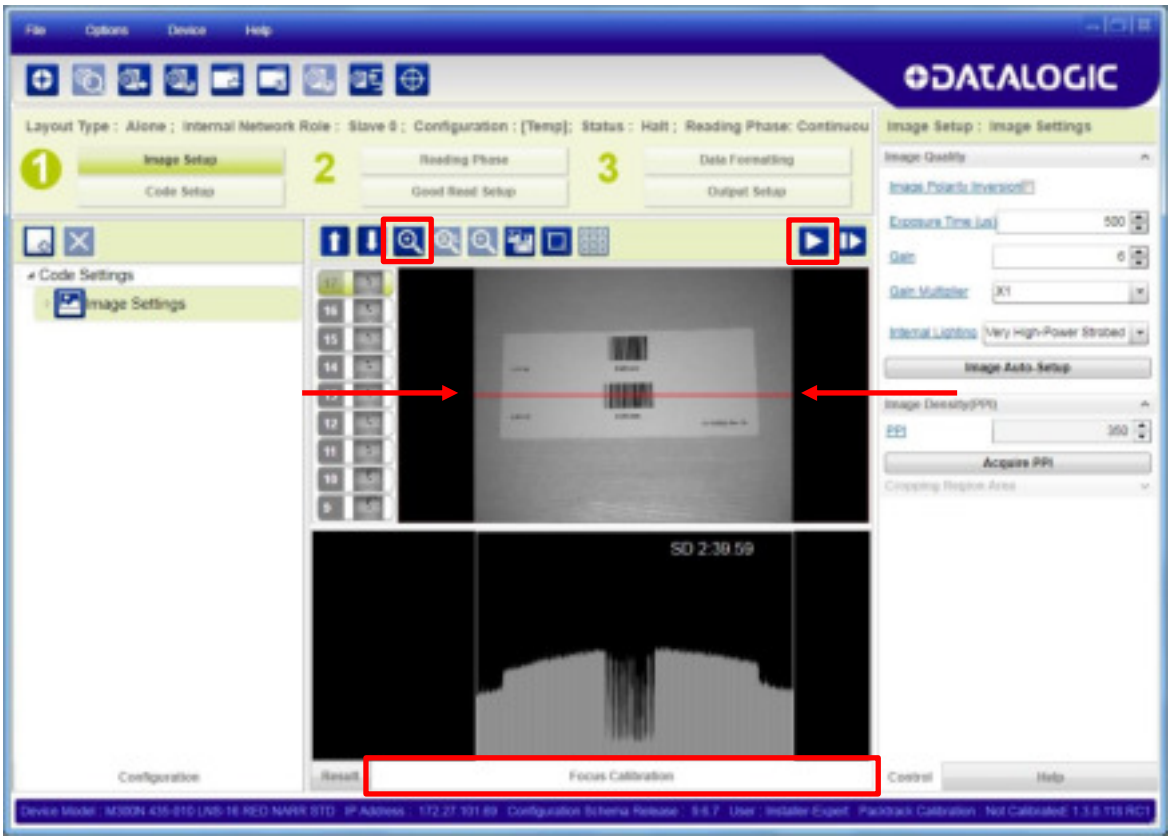

The red line in the image panel above the oscilloscope must pass through the code. Click Play to enter run mode and reposition the code.

NOTE: To enlarge the visual image of the code and the oscilloscope views, you can drag the Focus Calibration window up and click on the zoom image icon repositioning it on the code.

While in run mode, manually adjust the focus until the bars relative to the code in the oscilloscope demonstrate their maximum length (focus).

You can also see the visual focus on the code view.

When focused, click Pause to stop image acquisition.

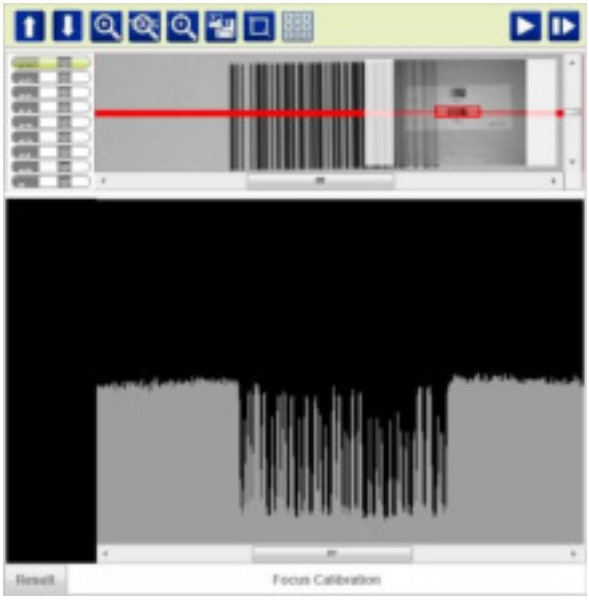

7. Click the **Acquire PPI** button to automatically set Image Density so that Matrix 450N will function correctly and to the fullest extent of its capabilities. This procedure is necessary for first time installations, or if the lens type or focal distance are changed.

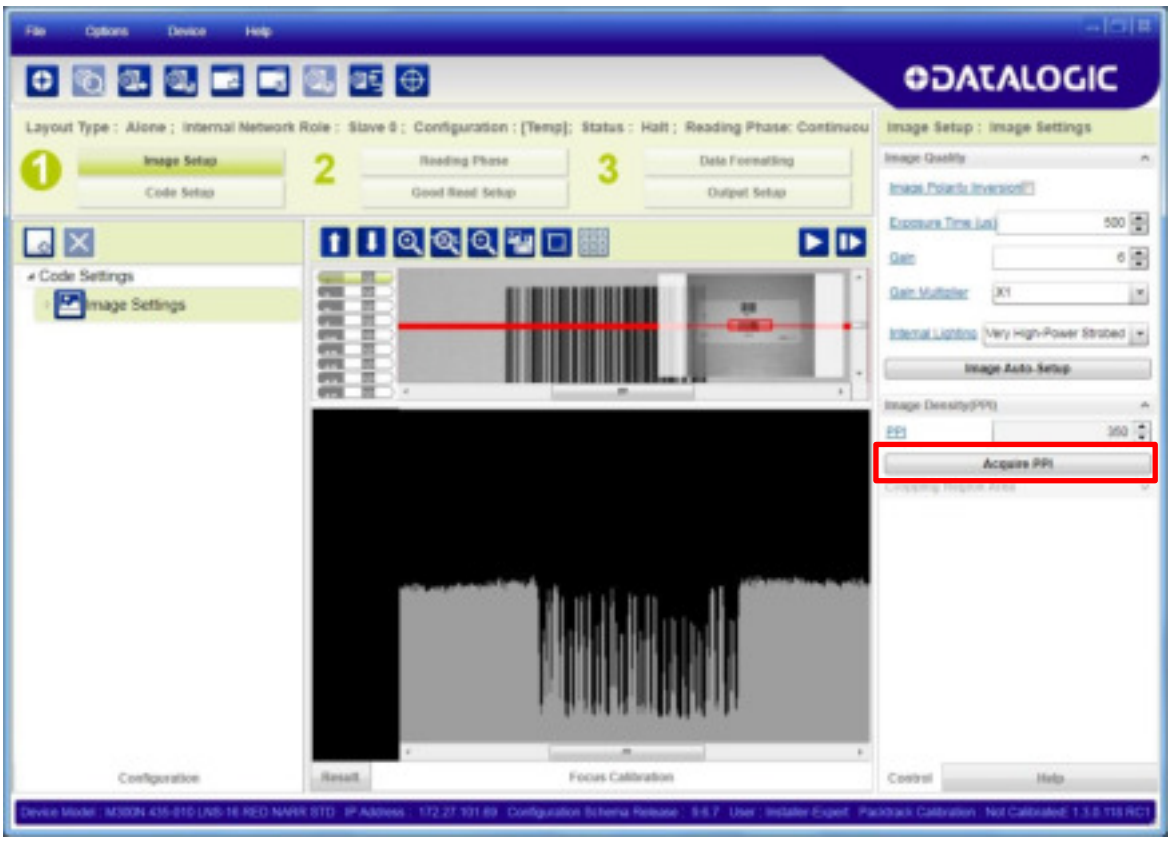

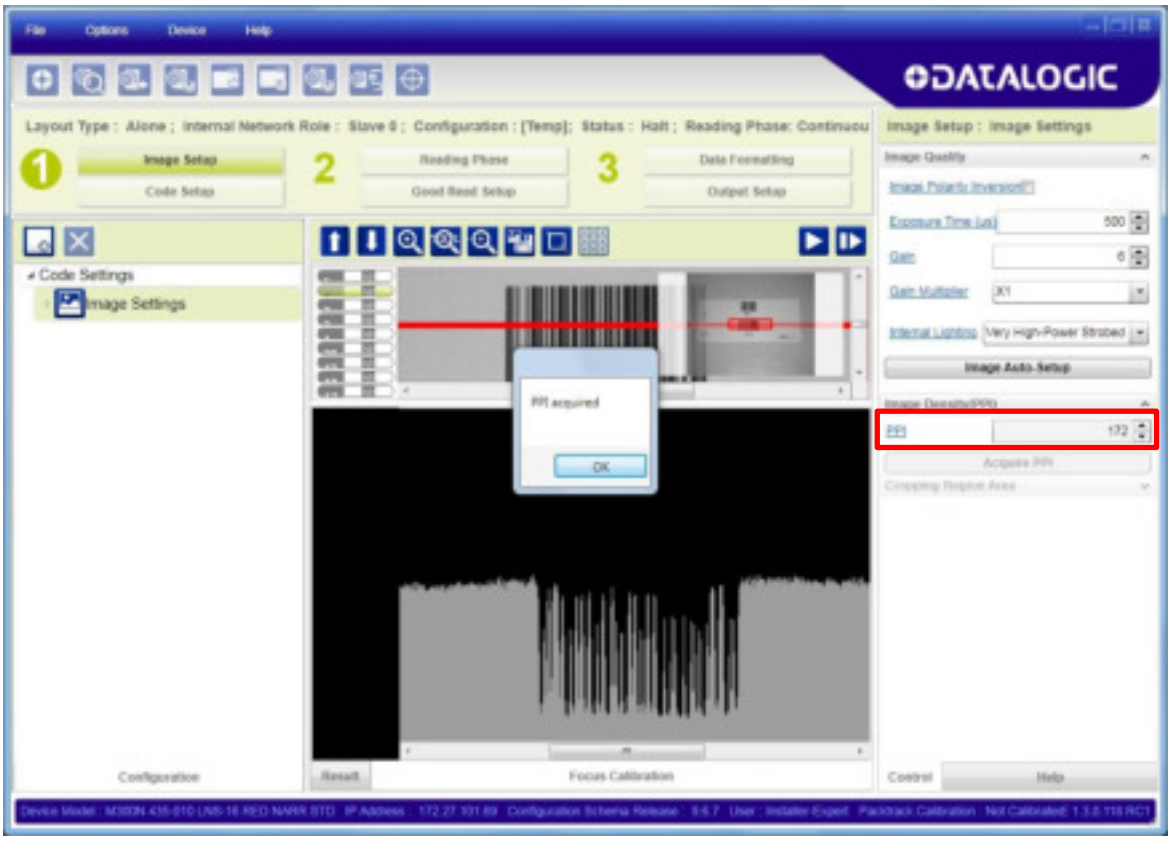

NOTE: At this point it is probably a good idea to save the configuration from temporary memory to permanent memory giving it a specific name.

8. Now place **an application specific code** in front of the reader and **only** click the **Image Auto-Setup** button to register any changes in lighting or code surface contrast.

   Do not repeat Focus Calibration or PPI.

Code Setup

1. Click on the Code Setup button. By default, the Data Matrix ECC 200 symbology is enabled. If this symbology is among those in your application it will be shown in the image display with its code symbology name and a green box around it indicating it is decoded.

NOTE: The large green box for each symbol indicates the code locator area which by default is equal to the maximum FoV. It can be resized and moved by dragging its borders with the mouse. The code must be found within this area in order to be decoded.

2. Add your application specific codes to the Code Settings by selecting them from the icons over the Configuration Parameters tree area. If the Data Matrix symbology is not used, then delete it from the Code Settings with the icon.

   If you don't know the code type, you can use the Code Autolearn feature by clicking on the icon[2].

3. For each code symbology set the relative parameters according to your application.

[2] *The Code Autolearn procedure will not recognize the following symbologies: Pharmacode, MSI, Standard 2 of 5, Matrix 2 of 5.*

Reading Phase

1. Select your application specific Operating Mode from the icons over the Configuration Parameters tree area: Continuous, One Shot, Phase Mode or PackTrack.

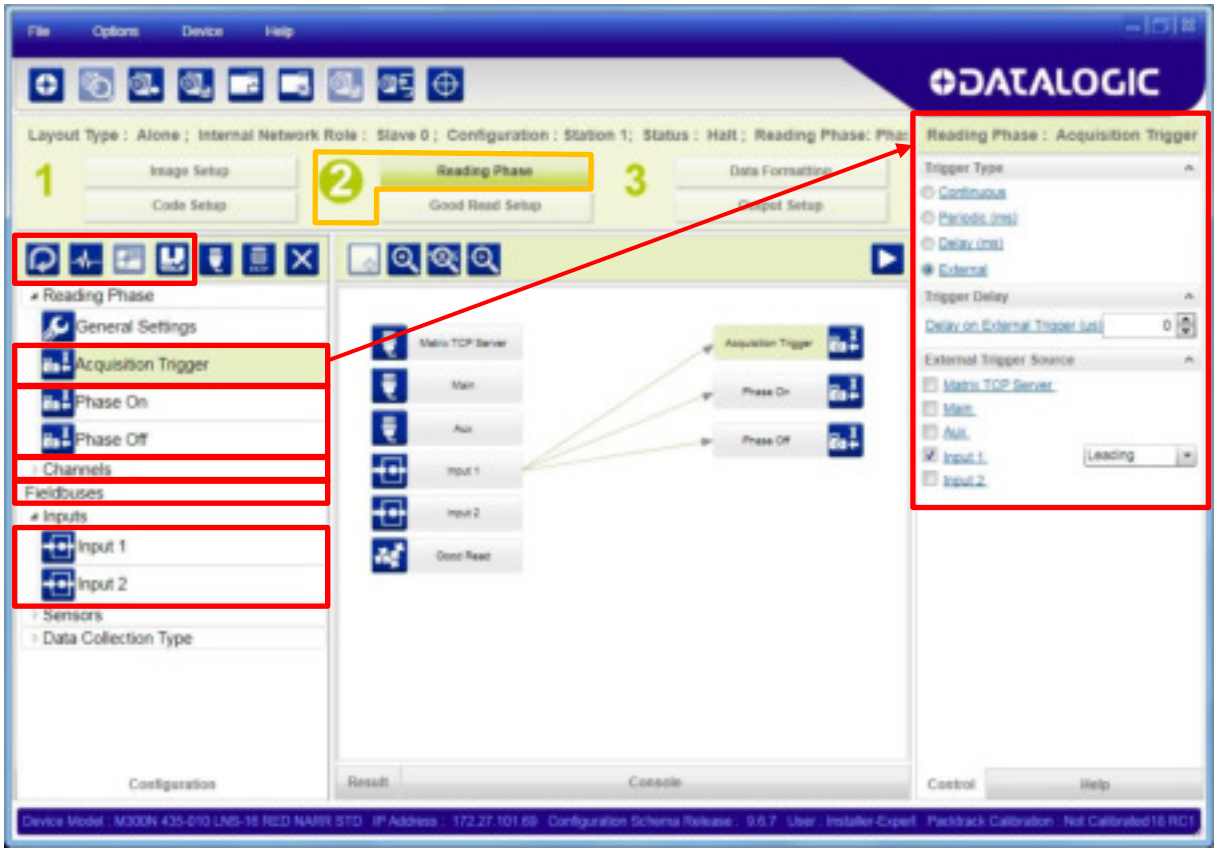

2. Configure the relative Operating Mode parameters from the Reading Phase parameters panel. Different groups will appear in the panel depending on the selected icons over the Configuration Parameters tree area.

Good Read Setup

1. Select your specific data collection type from the icons over the Configuration Parameters tree area: Code Collection, Code Combination, Presentation or Match Code. Not all data collection types are available for all Operating Modes; for example PackTrack Operating Mode only supports Code Combination. Incompatible data collection types will be shown in grey and cannot be selected.

   The following example shows Code Combination. By default, the Expected Codes (when more than one code type is selected), are in logical AND, which means that all codes are required to be decoded to produce a Good Read condition.

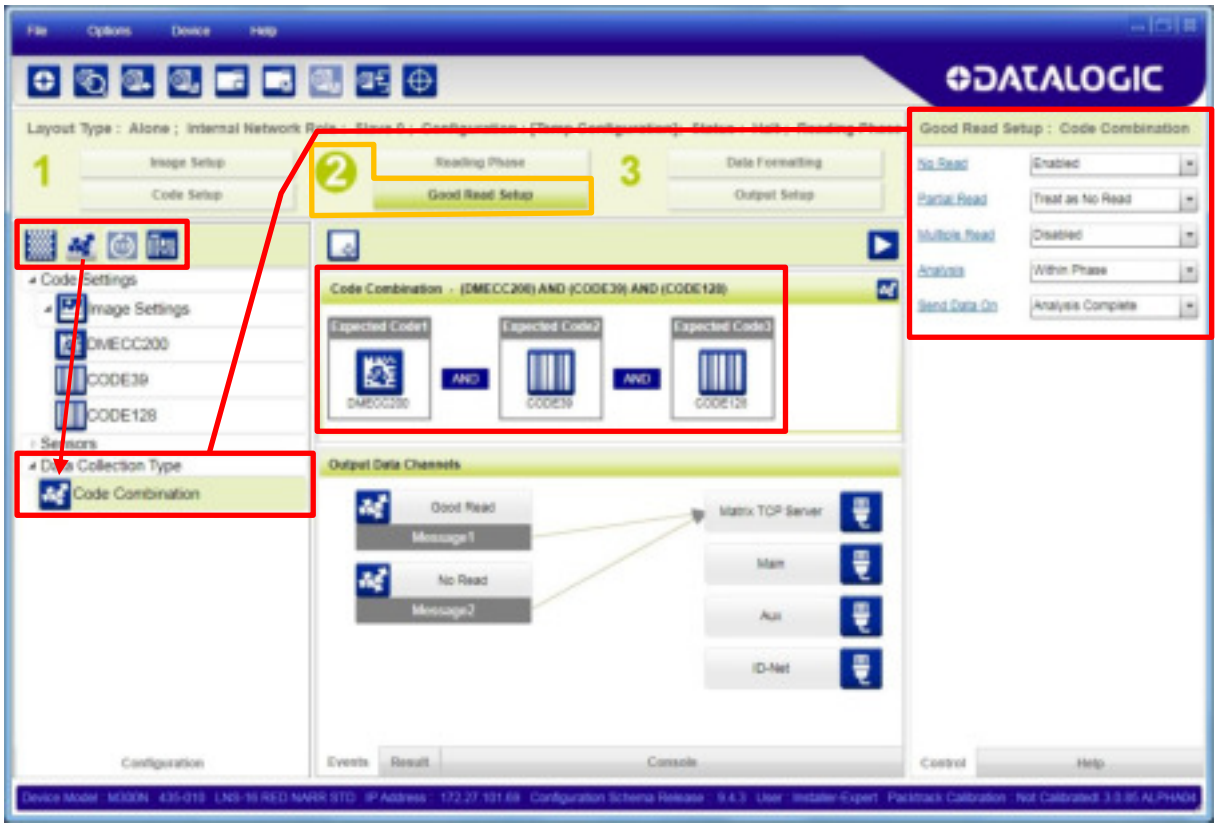

2. If a Good Read condition should be produced when any single code is decoded, independent from the others, then they need to be combined in logical XOR. To do this, drag the code icon(s) from their relative Expected Code box into the Expected Code box of the XOR combination you wish to create. Then delete the empty box by selecting it with the mouse (highlighted) and pressing the delete key on your keyboard.

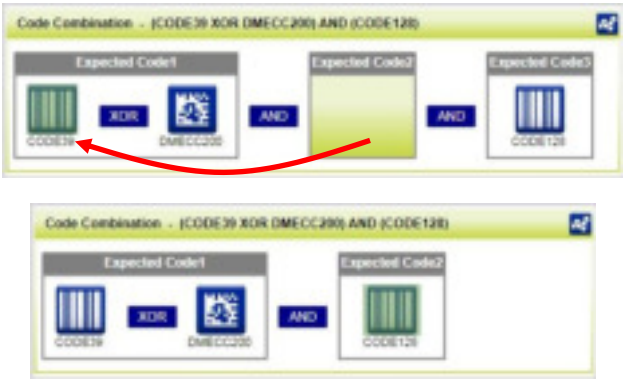

To create a logical AND condition from a logical XOR, create a new Expected Code box using the icon. Then drag the desired code icon from one box to the other.

Data Formatting

1. Configure your application specific Data Formatting Message(s) from the Configuration Parameters tree area: Message 1, Message 2, etc.

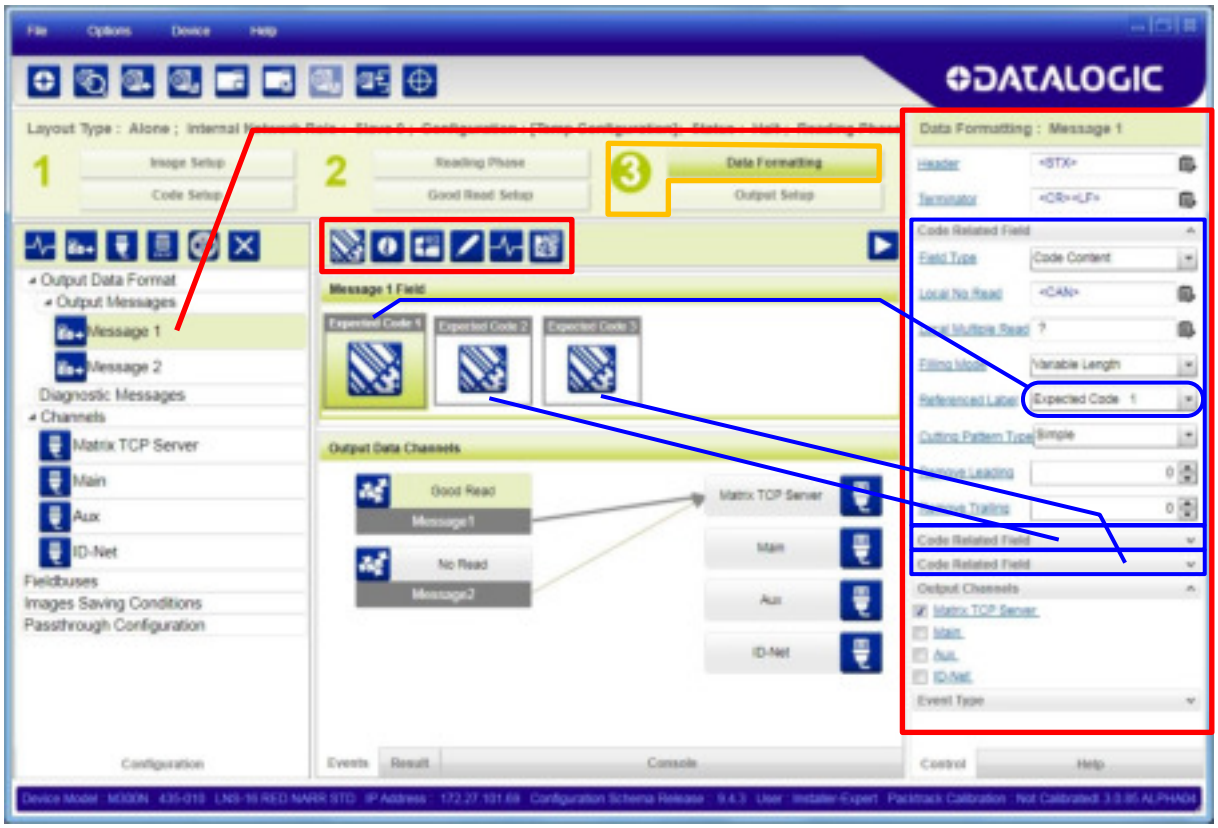

You can add fields to the output message by clicking on the icons above the Message Field area. They will be appended to the message. You can drag them to position them between other fields in the message so that the output message is ordered according to your application requirements.

Each field has its own relative configuration parameters in the parameters panel.

Output Setup

1. Configure your application specific Digital Output(s) and Green Spot (if used) from the Configuration Parameters tree area: Output 1, Output 2, etc.

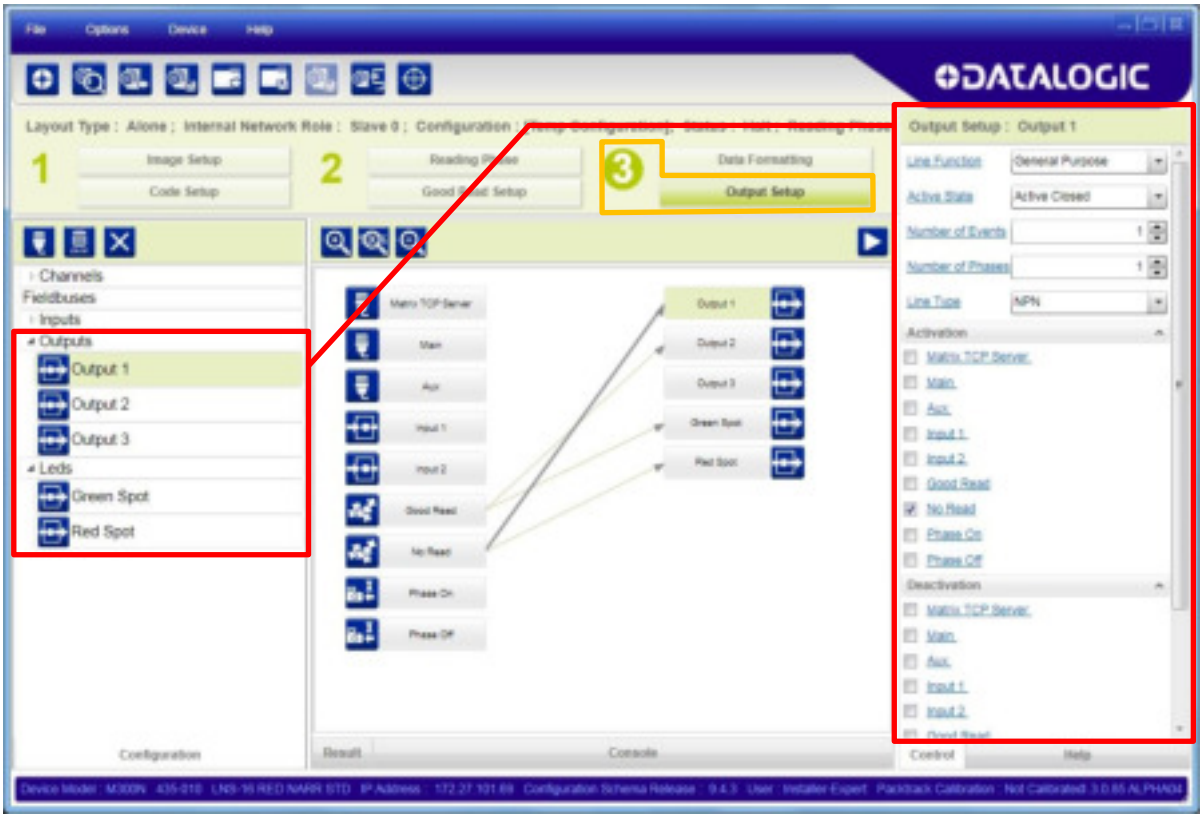

NOTE: Save the configuration from temporary memory to permanent memory, overwriting the previously saved configuration.

STEP 9 – TEST MODE

Use a code suitable to your application to test the reading performance of the system.

1. Enter the *Test* function by pressing and holding the X-PRESS push button until the Test LED is on.
2. Release the button to enter the *Test* function.

   Once entered, the Bar Graph on the five LEDs is activated and when codes are placed in the reading area (FOV), the Bar-Graph shows the Good Read Rate. In case of no read condition, only the STATUS LED is on and blinks.

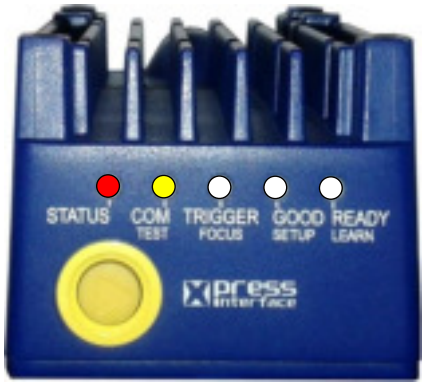

Figure 20 – X-PRESS Interface: Test Function

3. To exit the Test, press the X-PRESS push button once.

NOTE: By default, the Test exits automatically after three minutes.

The Bar Graph has the following meaning:

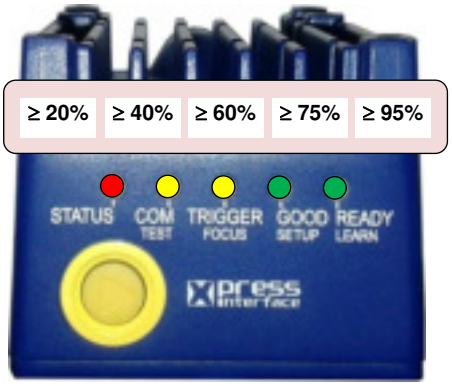

ADVANCED READER CONFIGURATION

For further details on advanced product configuration, refer to the DL.CODE User's Guide available in the DL.CODE Help menu.

Host Mode Programming

The reader can also be partially configured from a host computer using the Host Mode programming procedure.

2 INTRODUCTION

2.1 PRODUCT DESCRIPTION

Matrix 450N is a 5.0 megapixels **2D Imager** dedicated to middle range applications in the **Transportation and Logistic industry.** Matrix 450N is an extremely powerful reader, capable to address ID applications never covered before by a 2D-Imager.

It features a 5.0 megapixel CCD sensor, 1.1 GHz core, 512 megabytes of working memory, integrated Gigabit Ethernet, a 96-LED illuminator lighting system providing flashing and continuous high-power lighting, outstanding decoding libraries, real-time image streaming and saving.

This product offers superior reading performance, maximum reliability and extreme ease, in installation, in use and maintenance. For that, it guarantees a fast return on investment and a very minimum total cost of ownership.

Matrix 450N meets the requirements of reading in motion over conveyors. Each single shot – at such high resolution – has large coverage, enough to scan the whole practical area over many slot sorters, like cross-belts, tilt-trays, bombay and small-drop systems. Multiple reading attempts are generally not needed, so the highest reading throughput and ease of use are always guaranteed.

Matrix 450N is also the perfect solution for automated identification in **manual material handling applications**. thanks to the dedicated functionalities – high power continuous lighting, white illumination, aiming laser pointers, patented colored spot indicators, http live image mirroring – actually make Matrix 450N a comprehensive solution for operator attended scanning in presentation mode, like manual object sorting or manual conveyor loading/unloading.

The ID-NET reader clustering permits effectively extending the reading area for single-side and multi-side applications. Captured images are stored on-board and optionally transferred to external supports through the integrated Gigabit ethernet connectivity. No moving parts, rugged metal construction, IP65 enclosure rate and operative temperature up to 50°C guarantee a long life cycle even in harsh industrial environments.

Matrix 450N has been developed for use in numerous applications:

- Manual Postal Sorting
- Automated Postal Sorting
- Loading/Unloading
- Multimedia and Flats
- Induction Lines
- Order Fulfillment
- Reverse Logistics
- Static Scan
- Manual Presentation Scanning

Standard Application Program
A Standard Application Program is factory-loaded onto Matrix 450N. This program controls code reading, data formatting, serial port and Ethernet interfacing, and many other operating and control parameters. It is completely user configurable from a Laptop or PC using the dedicated configuration software program DL.CODE™, provided on the DL.CODE mini-DVD (downloaded zip file or mini-DVD accessory).

There are different programmable operating modes to suit various code reading system requirements.

Quick, automatic focus, positioning, calibration and code setting of the imager can be accomplished using the X-PRESS button and LEDs on top of the reader without the necessity of a PC.

The previous functions can also be performed through DL.CODE. This tool includes visual feedback from the reader.

DL.CODE provides a Calibration Tool to verify the exact positioning of the reader and to maximize its reading performance.

Statistics on the reading performance can also be visualized through the Monitor window in DL.CODE.

Excellent Performance

- 5.0 MPixels
- Adjustable focus through C-Mount lenses
- Powerful Illuminator Lighting Systems
- Outstanding decoding capability on 1D, 2D, Stacked, Postal symbologies
- Omni-directional reading
- Frame Rate up to 15 frames/sec
- Image Cropping for higher frame rate
- Up to 100 readable codes in a single frame

Ease of Setup

- Quick installation without PC by using X-PRESS interface for easy and intuitive setup
- Blue Diamonds aiming and focusing system
- Automatic Imager calibration and Code Settings
- Calibration Tool to verify exact code positioning in the Field of View and to maximize the reading performance
- Windows-based DL.CODE software to configure the reader parameters via PC Ethernet interface
- User-defined database of Image Acquisition Settings (parameter sets)

Ease of Use

- X-PRESS interface LEDs provide operational and performance feedback
- Green Spot and beeper for immediate Good Read feedback
- Red Spot and beeper for immediate No Read feedback
- Different operating modes to suit various application requirements
- Multi Image Acquisition Settings for higher reader flexibility
- Run Time Self-Tuning for extreme reader flexibility
- Image saving and storage with buffering capability
- Diagnostic software tools

Flexible Solution

- Modular design
- Adjustable C-Mount lenses
- Complete set of Accessories like external lighting systems, mounting brackets, connection boxes, cables and photocells
- Ethernet Connectivity with TCP/IP socket for reader parameter configuration, data and image transfer, FTP client, etc.
- 3 serial communication interfaces (Main, Auxiliary, ID-NET)
- General purpose optocoupled I/Os

Industrial Strength

- Industrial compact 2D reader
- Rugged full metal construction
- Sealed circular connectors
- IP65 protection class
- 50 °C max operating temperature
- Supply voltage ranges from 10 to 30 Vdc for Matrix 450N (LT-03x requires 24 Vdc)

2.2 INDICATORS AND KEYPAD BUTTON

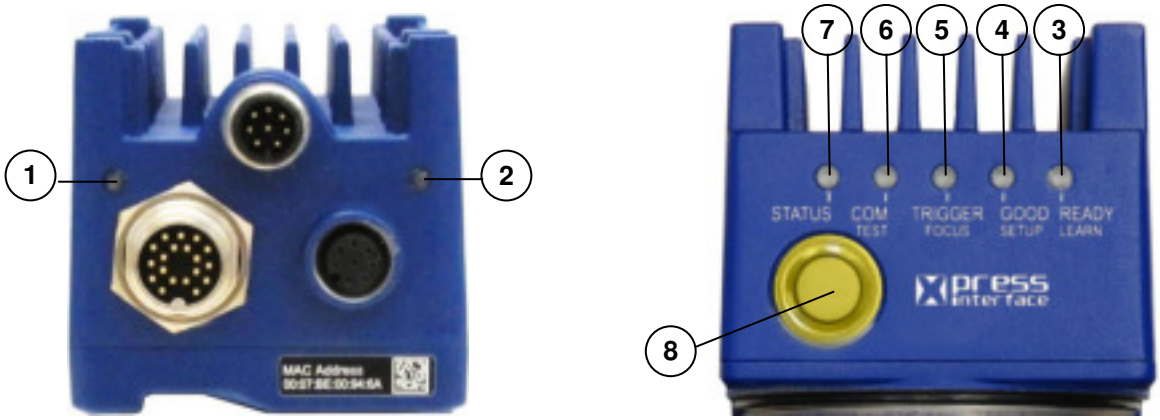

Figure 21 - Indicators

The following LED indicators are located on the reader:

POWER	blue LED indicates that the reader is connected to the power supply (Figure 21, 1)
NET	yellow LED indicates connection to the on-board Ethernet network (Figure 21, 2)

In normal operating mode the colors and meaning of the five LEDs are illustrated in the following table:

READY	green LED indicates that the reader is ready to operate (Figure 21, 3)
GOOD	green LED confirms successful reading (Figure 21, 4)
TRIGGER	yellow LED indicates the status of the reading phase (Figure 21, 5)
COM	yellow LED indicates active communication on the main serial port * (Figure 21, 6)
STATUS	red LED indicates a NO READ result (Figure 21, 7)

* When connected to a Fieldbus network through the CBX500, the COM LED is always active, even in the absence of data transmission, because of polling activity on the Fieldbus network.

During the reader startup (reset or restart phase), these five LEDs blink for one second.

In X-PRESS Configuration mode the colors and meaning of these five LEDs are described in par. 2.4.

The keypad button (Figure 21, 8), is software programmable. By default it starts the X-PRESS interface for quick installation without using a PC (see chp. 1).

2.3 ID-NET

The ID-NET network is a built-in high-speed interface dedicated for high-speed reader interconnection. ID-NET is in addition to the Main and Auxiliary serial interfaces.

The following network configurations are available:

- **ID-NET Synchronized:** Single station – multiple readers

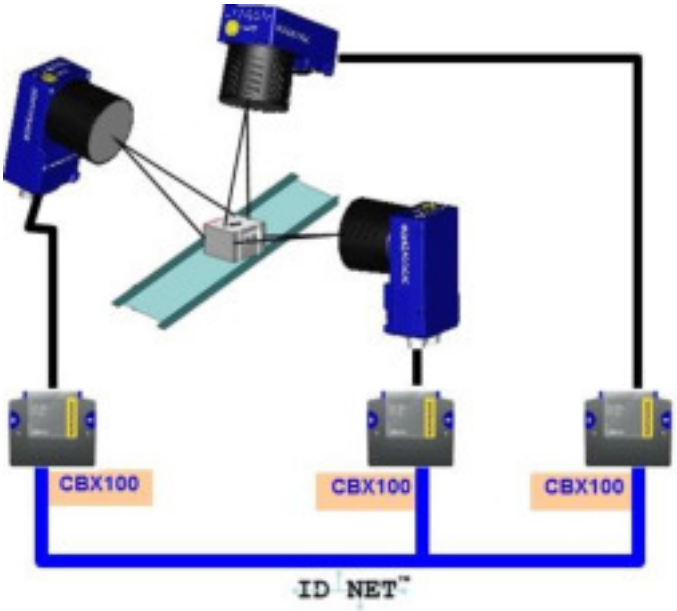

ID-NET interface allows local connection of multiple readers reading different sides of the same target. All readers share a single presence sensor and activate/deactivate simultaneously.

At the end of each reading phase a single data message is transmitted to the host.

Thanks to ID-NET, data communication among readers is highly efficient so that an immediate result will be available.

See par. 4.3 for connection details and par. 7.4 for configuration details.

- **ID-NET Multidata:** Multiple stations – single readers

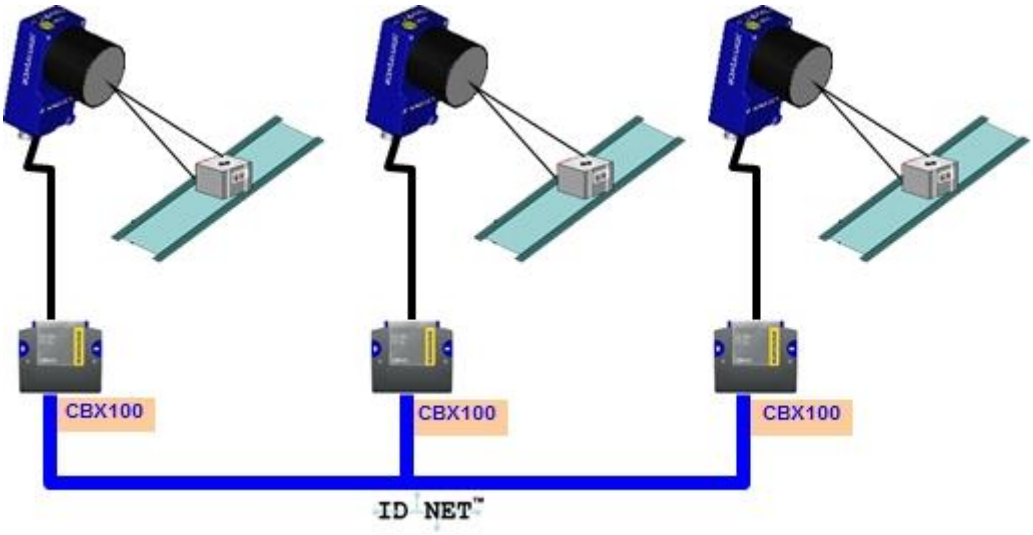

ID-NET interface allows connection of readers reading objects placed on independent conveyors. All readers are typically located far away from each other and they can have different operating modes from each other.

At the end of each reading phase, each reader transmits its own data message to the host. Thanks to ID-NET, data collection among readers is accomplished at a high speed without the need of an external multiplexing device. This leads to an overall cost reduction and to simple system wiring.

See par. 4.3 for connection details and par. 7.4 for configuration details.

2.4 X-PRESS HUMAN MACHINE INTERFACE

X-PRESS is the intuitive Human Machine Interface designed to improve ease of installation and maintenance.

Status information is clearly presented by means of the five colored LEDs, whereas the single push button gives immediate access to the following relevant functions:

- Test with bar graph visualization to check static reading performance
- Focus/Locate to turn on the Blue Diamonds to aid focusing and positioning.
- Setup to perform Exposure Time and Gain calibration.
- Learn to self-detect and auto-configure for reading unknown codes

2.4.1 X-PRESS Functions

Quick access to the following functions is provided by an easy procedure using the push button:

1 – **Press** the button (the Status LED will give a visual feedback).

2 – **Hold** the button until the specific function LED is on (Test, Focus, Setup or Learn).

3 – **Release** the button to enter the specific function.

Once button is pressed, the cycle of LEDs activation is as follows:

Release button
to Exit

hold➔

Release button
to enter Test Mode

hold➔

Release button
to enter Focus/Locate Mode

hold➔

Release button
to enter Setup Mode

hold➔

Release button
to enter Learn Mode

hold➔

Release button
to Exit

➔ (cycle)

Test Mode

Once entered, the Bar Graph on the five LEDs is activated and if the imager starts reading codes the Bar-Graph shows the Good Read Rate. The Bar Graph has the following meaning:

≥20%	≥40%	≥60%	≥75%	≥95%

In case of a NO READ condition, only the Status LED is on and blinks.

To exit the Test Mode, press the X-PRESS push button once.

NOTE: By default, the Test exits automatically after three minutes.

Focus/Locate

This function causes the Blue Diamonds and laser pointers to turn on. The Blue Diamonds can be used to focus the lens at the desired reading distance, while the laser pointers (being centered on the FOV) can be used to position the imager on the code. The Focus LED blinks to indicate this state.

To exit the Focus/Locate Mode, press the X-PRESS push button once. The Blue Diamonds and laser pointers turn off.

Setup

Once entered, the imager automatically performs Image Acquisition parameter calibration for the specific code presented to it.

The Setup LED will blink until the procedure is completed.

The Setup procedure ends when the Image Acquisition parameters are successfully saved in the reader memory, the Setup LED stops blinking and Matrix 450N emits 3 high pitched beeps.

If the calibration cannot be reached after a timeout of about 5 (five) seconds Matrix 450N will exit without saving the parameters to memory, the Setup LED will stop blinking and in this case Matrix 450N emits a long low pitched beep.

Learn

Once entered, the imager starts a procedure to automatically detect and recognize **a single code** which is presented to it. Successive Learns will substitute the current code.

The Learn LED will blink until the procedure is completed.

The Learn procedure ends when the Image Processing and Decoding parameters are successfully saved in the reader memory, the Learn LED will stop blinking and Matrix 450N emits 3 high pitched beeps.

If the calibration cannot be reached after a timeout of about 3 (three) minutes, Matrix 450N will exit without saving the parameters to memory, the Learn LED will stop blinking and in this case Matrix 450N emits a long low pitched beep.

2.4.2 Diagnostic Indication

The "STATUS" and "READY" LEDs blink simultaneously to signal the presence of an error. Diagnostic message transmission on interfaces can be enabled to provide details about specific error conditions. See the Diagnostic Error Conditions chart in the Diagnostic page of the DL.CODE Monitor. Diagnostic messages are also shown on the optional accessory BM150 display module, see par. 7.9.3.

LED	STATUS
READY	BLINK
GOOD	
TRIGGER	
COM	
STATUS	BLINK

2.5 MODEL DESCRIPTION

The Matrix 450N reader is described by the following characteristics:

MATRIX 450N XXX-0X0

Sensor Size

8 = 5.0 Megapixels (2448x2050)

Illuminators

0 = BS (Base, No Illuminator)

Lens

0 = C-Mount (No Lens)

Interface

3 = Gigabit Ethernet (GIGE)

2.5.1 Lens/Illuminator Selection

The following table shows the correct lens/illuminator combinations to be used for Matrix 450N imager assembly.

Lenses			Illuminators		
93ACC0041	LNS-1216	16 mm C-Mount Lens 5MP with anti-vibration components	93A400034	LT-032	ULTRA POWER LT NARROW BLUE 40°
93ACC0034	LNS-1225	25 mm C-Mount Lens 5MP with anti-vibration components	93A400032	LT-030	ULTRA POWER LT SUPERNARROW BLUE 20°
			93A400033	LT-031	ULTRA POWER LT SUPERNARROW WHITE 20°
			93A400034	LT-032	ULTRA POWER LT NARROW BLUE 40°
93ACC0035	LNS-1235	35 mm C-Mount Lens 5MP with anti-vibration components	93A400032	LT-030	ULTRA POWER LT SUPERNARROW BLUE 20°
			93A400033	LT-031	ULTRA POWER LT SUPERNARROW WHITE 20°
93ACC0036	LNS-1250	50 mm C-Mount Lens 5MP with anti-vibration components	93A400032	LT-030	ULTRA POWER LT SUPERNARROW BLUE 20°
			93A400033	LT-031	ULTRA POWER LT SUPERNARROW WHITE 20°

2.6 ACCESSORIES

The following accessories can be used with the Matrix 450N reader.

Accessory	Description	Order No.
Lenses		
LNS-1216	16 mm C-Mount Lens 5MP with anti-vibration components	93ACC0041
LNS-1225	25 mm C-Mount Lens 5MP with anti-vibration components	93ACC0034
LNS-1235	35 mm C-Mount Lens 5MP with anti-vibration components	93ACC0035
LNS-1250	50 mm C-Mount Lens 5MP with anti-vibration components	93ACC0036
LPK-45-000	Anti-vibration Kit for C-Mount Lenses	93ACC0051
Lighting Systems		
LT-030	Ultra Power LT Super Narrow Blue 20°	93A400032
LT-031	Ultra Power LT Super Narrow White 20°	93A400033
LT-032	Ultra Power LT Narrow Blue 40°	93A400034
Cables		
CAB-LD-002	LT Driver Cable With Power (0.2M)	93A050032
CAB-LD-102	LT Driver Cable No Power (0.2M)	93A050044
CAB-LP-03	Lighting Power Cable (3M)	93A050033
CAB-LP-05	Lighting Power Cable (5M)	93A050037
CAB-PG-0002	Vdc Power PG-120 To BA400 or QL (2M)	93ACC1870
CAB-PG-0105	Vdc Power PG-120 To LT-03x (5M)	93A050043
CAB-MS003	M16-IP67 Cable To QL (0.35M)	93A051387
CAB-MS01	M16-IP67 Cable To CBX or QL (1M)	93A051358
CAB-MS03	M16-IP67 Cable To CBX or QL (3M)	93A051359
CAB-MS05	M16-IP67 Cable To CBX or QL (5M)	93A051360
CAB-GE01	M12-IP67 To RJ45 Ethernet Cable (1M)	93A050034
CAB-GE03	M12-IP67 To RJ45 Ethernet Cable (3M)	93A050035
CAB-GE05	M12-IP67 To RJ45 Ethernet Cable (5M)	93A050036
CBL-1480-01	Thin M12/5P Male/Female (1M)	93A050049
CBL-1480-02	Thin M12/5P Male/Female (2M)	93A050050
CBL-1490	Term. Resist. Thin M12/5P/Male	93A050046
CBL-1496	Term. Resist. Thin M12/5P/Female	93A050047

Accessory	Description	Order No.
Connectivity		
CBX100	Compact Connection Box	93A301067
CBX500	Modular Connection Box	93A301068
BM100	Backup Module for CBX100/500	93ACC1808
BM150	Display Module for CBX500	93ACC1809
Various Fieldbus and Non-Filedbus Host Interface Modules and All-In-One Connection Box Kits are available		
BA100	Mounting Adapters to DIN Rail	93ACC1821
BA200	Mounting Adapters (to Bosch or 80/20 Frames)	93ACC1822
Various M12 Panel Connectors for CBX Connection Boxes are available		
BA900	Two Cable Glands Panel	93ACC1847
QL100	Quick Link Slave ID-NET T-Connector	93ACC1860
QL150	Quick Link Slave ID-NET + Service T-Connector	93ACC1868
QL200	Quick Link Slave ID-NET + Power T-Connector	93ACC1861
QL300	Quick Link Master ID-NET - Serial Host Connector	93ACC1862
QLM500	Quick Link Metal Master ID-NET - EtherNet/IP Gateway	93ACC0037
QLM600	Quick Link Metal Master ID-NET - Profibus Gateway	93ACC0033
QLM700	Quick Link Metal Master ID-NET - Profinet IO Gateway	93ACC0038
Various M12 Service Cables and Field Mount Connectors are available for Quick Link Series Connectors		
Power Supplies		
PG-120-K01	AC/DC Power Supply Kit (EU)	93ACC0046
PG-120-K02	AC/DC Power Supply Kit (UK)	93ACC0047
PG-120-K03	AC/DC Power Supply Kit (US)	93ACC0048
PWR-120	Power Unit 110/230 Vac 24Vdc 120W	93ACC1530
PWR-480B	Power Unit 110/230 Vac 24Vdc 480W	93ACC0076
Sensors		
MEP-593	Photocell Kit PNP (PH-1)	93ACC1791
MEP-543	Photocell Kit-NPN	93ACC1728
Brackets		
BK-45-000	LT-03x L-shaped Mounting Bracket	93ACC0049
BK-45-010	Matrix 450N Body Mounting Bracket	93ACC0050
BK-90-040	Alternative Fixing Brackets for External Mirror (2 pcs)	93A201208
External Mirrors		
EMK-MTX-380	External Mirror – 380 mm (alternative brackets included)	93ACC0086
EMK-MTX-600	External Mirror XRF410N – 600 mm (without alternative brackets)	93ACC0116
Software Management		
WebSentinel PLUS	license images 5 arrays	93A101027
WebSentinel PLUS	license images 10 arrays	93A101028
WebSentinel PLUS	license images 20 arrays	93A101029
WebSentinel PLUS	license images 32 arrays	93A101030
WebSentinel PLUS	license images 64 arrays	93A101031

2.7 APPLICATION EXAMPLES

2.7.1 Manual Postal Sorting

Manual object sorting solutions are largely implemented by major postal companies and couriers for the final stage of the process, generally for trans-shipments from main hubs to local facilities for final delivery. Also several regional and small logistic companies perform the sortation task manually, since the intensity of the traffic is not compatible with high-end automated handling infrastructures.
Flyers, small parcels and letter packs are manually moved across the Matrix 450N scanning zone, where two laser pointers mark the center. The Sort-to-Light mode is one of the most common solutions: the code(s) is communicated to the host machine, sometimes even a traditional PC, which illuminates a lamp indicator for sorting to destination, whether bin, chute or cassette.

Matrix 450N results in significant saving on labor and increases efficiency: faster handlings, zero mis-sorts, stable and predictable throughput, without dependencies on operator skills.

2.7.2 Loading/Unloading

Matrix 450N can be applied in an over-the-belt style for unattended scanning in motion and also in a semi-automated style, performed in presentation mode to the overhead reader

during the manual item handling. The continuous high power illumination, white color, is a crucial advantage, offering the maximum comfort in proximity to the working areas.

Having no moving parts – beyond eliminating any annoying operational noise – is synonymous with maximum robustness to mechanical stress and the guarantee of a longer product life-cycle.

Thanks to the integrated effective beeper and the spot indicators, it provides real-time feedback, with no need to integrate further dedicated hardware. The always-on laser spots are an effective tool for scanning area indication and also to easily check the proper positioning of the reader without any special tool or technical skills.

2.7.3 Automated Postal Sorting

Matrix 450N represents a real change in small item sorting applications operated through slot conveyors, like cross-belts or small drop sorters. Easier installation, easier maintenance, superior performance, longer life-cycle make Matrix 450N a unique and compelling solution for over-the-belt reading.

Thanks to 5.0 megapixel image captures, each single shot frames the entire practical area. One-reader-one-shot is the optimal condition to obtain the maximum reading throughput, thanks to faster decoding processing. Under this operating condition, also the synchronization between image acquisition and target slot is more than simple. And the image capture can be simply associated with the data of each sorted item, for any reporting or analysis purposes.

Matrix 450N can also be applied in scanning applications of large conveyors or multi-sided reading. Through the ID-NET clustering, multiple readers can be effectively combined to extend the scanning area. The building block approach is a real advantage to build up cost-effective solutions serving the specific requirements with the maximum precision.

2.7.4 Multimedia and Flats

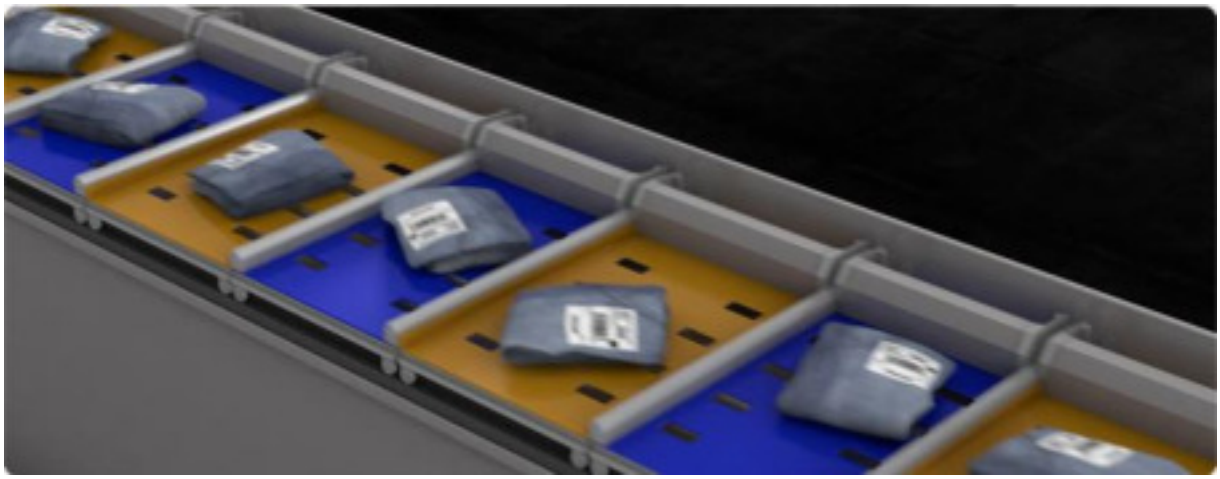

With small and medium object size, like multimedia or apparel, the automated handling is generally operated through slot conveyors, like cross-belt, bombay or push trays. Typical applications use high resolution codes, with challenging low aspect ratios. Matrix 450N definitively represents a top solution for this application segment, capable of superior performance, higher reliability and easier integration with respect to any other traditional solution.

Because of the outstanding intrinsic DOF with fixed focus, it does not need any height measurement, therefore definitely simplifying the integration and eliminating any extra hardware. Low aspect ratio codes have no impact on the simplicity of the Matrix 450N reading solution, since regular image capture contains any scanning pattern inside the reading area, and therefore always the maximum level of data integrity. Due to this, installation is extremely fast and easy, and does not require any special skills for the correct synchronization and check of scanning coverage.

2.7.5 Order Fulfillment

Here, Matrix 450N offers top performance and maximum ease of use in manual order fulfillment. The large scanning zone, fast acquisition, and high power continuous lighting, which is all a proper combination of key features resulting in prompt reading while the object is rapidly moved into the scanning area, leveraging unrivalled and stable throughput. Unlike

any traditional solution, Matrix 450N can manage the largest variety of codes thanks to the high resolution 2D-sensor. Therefore, maximum independence among code types, 1D or 2D, code resolution and code height is always guaranteed. Thanks also to the white lighting, a large variety of colored codes are supported. Image captures can be optionally used for mirroring the scanning process to a possible side panel.

2.7.6 Static Scan

Matrix 450N is a valid solution for scanning large stationary objects, from pallets to stacked trays.

There are multiple advantages in using Matrix 450N. First of all, no parts in movement – no scan rotor and no oscillating mirror – delivers crucial advantages in terms of maximum tolerance to vibration and shock, as for example a forklift may generate. Then, a comfortable no-flashing white illumination replaces the laser beam. And also the green spot and the beeper are easy feedback for the operator, to validate a successful reading. In order to extend the illuminator life-cycle and also to save energy, the continuous illumination can be optionally activated on a trigger basis, simply switched off during inactive periods.

2.7.7 Manual Presentation Scanning

In **Manual Material Handling** applications, manual presentation scanning is more and more the preferred method for item identification obtaining **maximum productivity and operational efficiency**: while the stationary overhead reader continuously scans the working area, the operator can easily and quickly handle objects of various dimensions and weights, since no point-and-shot is required for scanning. No extra tools or infrastructure is necessary in the working area; no extra operations for part identification other than passing the object through the scanning zone. No training is required for users.

The large coverage area and fast acquisition rate – by **Matrix450N** – permits rapidly handling objects in sequence with great tolerance.

White illumination and continuous high power mode enable top performance with the maximum comfort for operators.

A couple of red laser spots clearly indicate the center of the reading zone. And the **Green-Red spots**, directly projected on the scanned object, communicate the **reading result** or even specific conditions when **driven by external commands**.

Thanks to the continuous image acquisition, the http image mirroring produces a sort of real-time video, useful feature for local visualization on-screen or also for remote monitoring. The live streaming uses the **standard http** protocol for transmission and then a standard web browser is all that is required for the display.

The complete set of integrated functionalities makes **Matrix 450N** a comprehensive solution for manual scanning, easy to deploy, easy to use and with minimum cost for maintenance.

3 INSTALLATION

3.1 PACKAGE CONTENTS

Verify that the Matrix 450N reader and all the parts supplied with the equipment are present and intact when opening the packaging; the list of parts includes:

- ❑ Matrix 450N reader
- ❑ Quick Reference Guide
- ❑ Test Charts (2):
  - Focusing and PPI Setup Chart
  - Grade A Code 128 Test Chart

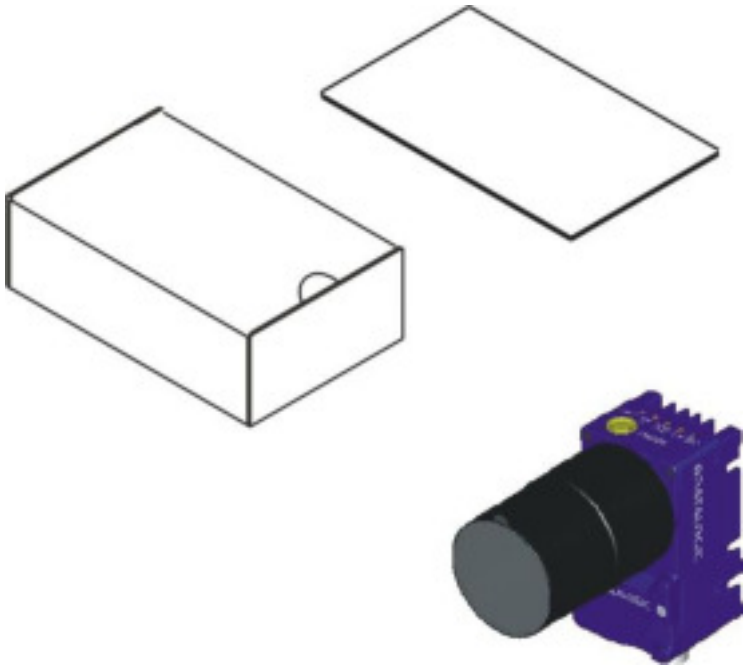

Figure 22 - Package Contents

3.2 MECHANICAL DIMENSIONS

Matrix 450N is designed to be used with one of the LT-03x Series Lighting Systems. In this configuration the L-shaped LT-03x mounting bracket must be used to support the whole assembly, (refer to Figure 24).

In alternative applications Matrix 450N can be installed with an External Illuminator or custom lighting system (LT-03x is not mounted). In this configuration Matrix 450N can be installed to operate in different positions using the body mounting bracket accessory shown in Figure 28.

The fourteen screw holes (M4) on the body of the reader can also be used for custom mounting solutions.

Refer to par. 3.3 for various mounting solutions and correct positioning, and par. 6.2 for Reading Distance considerations.

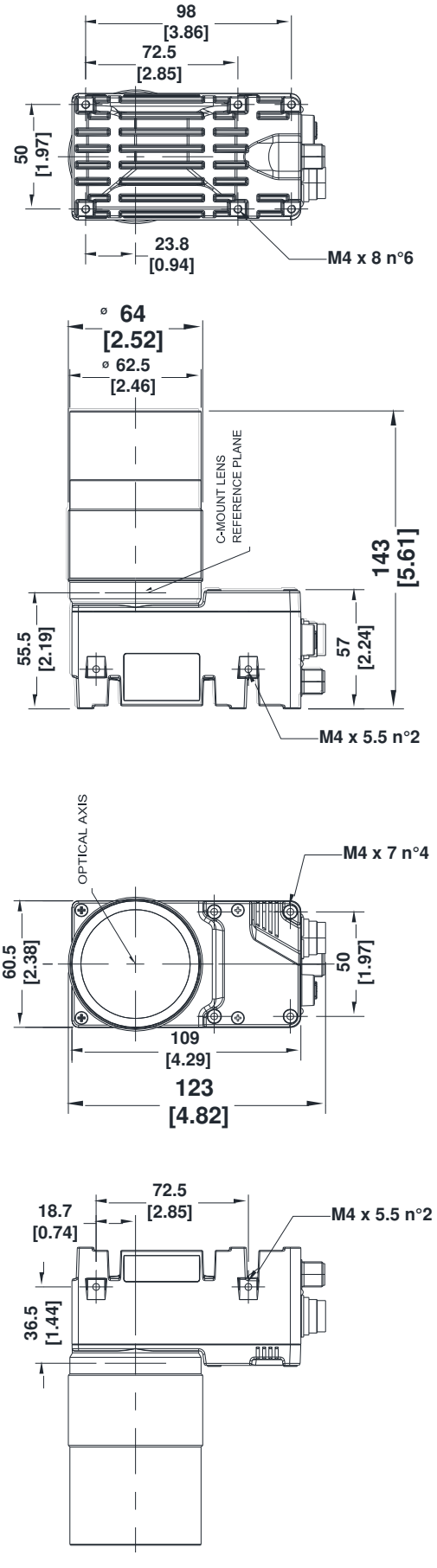

mm
[in]

Figure 23 - Overall Dimensions

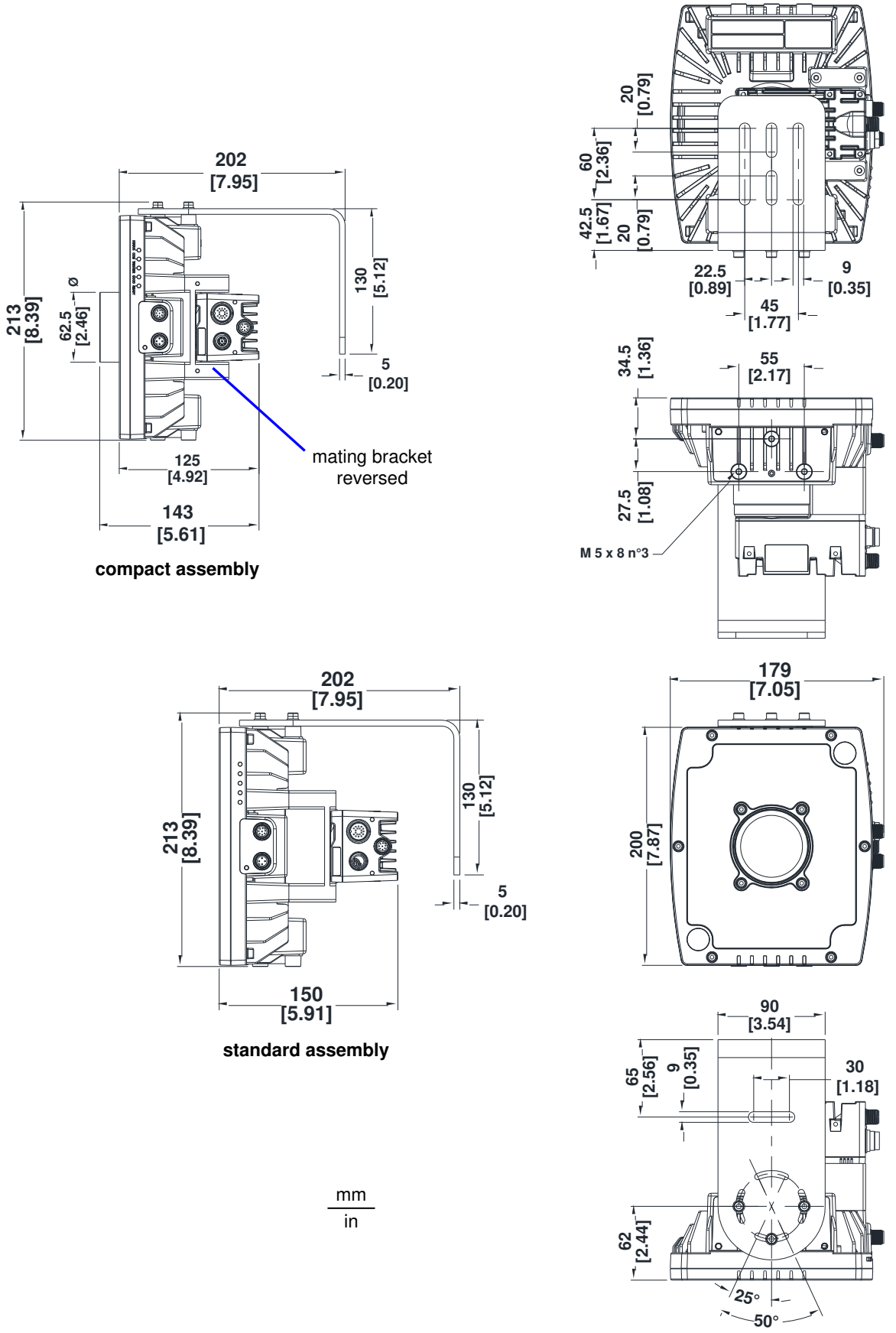

Figure 24 - Matrix 450N + LT-03x + L-Bracket Overall Dimensions

3.3 MOUNTING AND POSITIONING MATRIX 450N

Using the LT-03x L-shaped mounting bracket you can obtain rotation on the various axes of the reader as shown in the diagrams below:

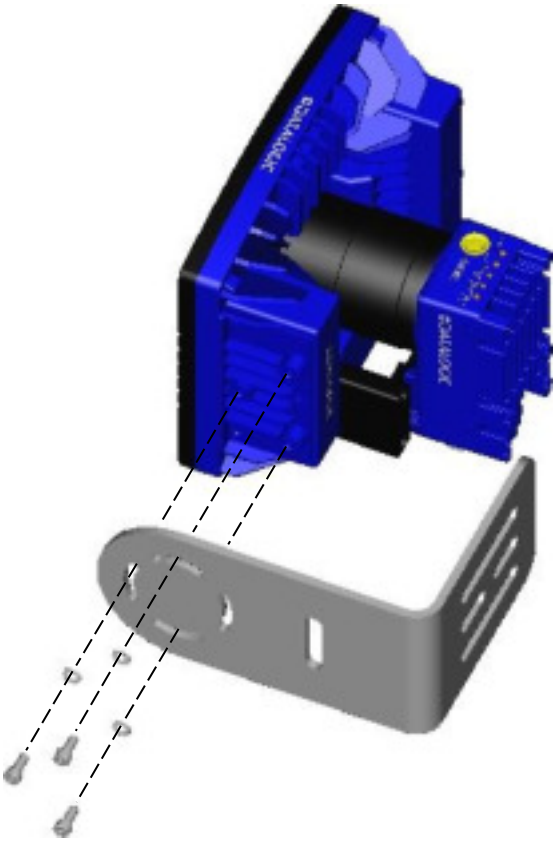

Figure 25 –Mounting LT-03x Bracket

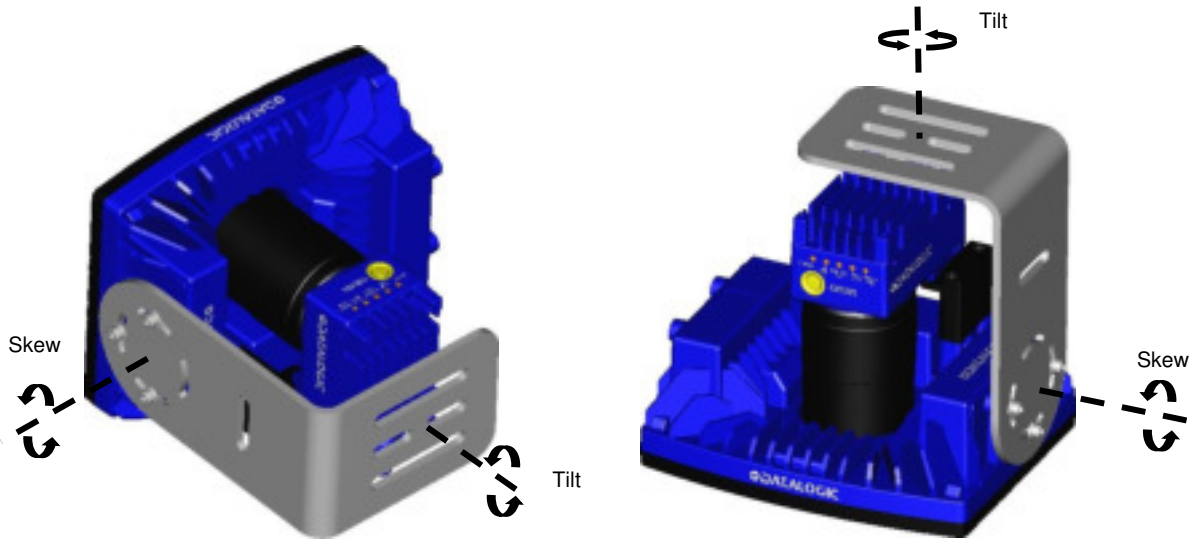

Figure 26 – Matrix M450N Positioning with LT-03x Bracket

When operating in high vibration environments use two L-shaped mounting brackets and mount the anti-vibration kit for C-mount lenses, see par.2.6. You can obtain rotation on the various axes of the reader as shown in the diagram below:

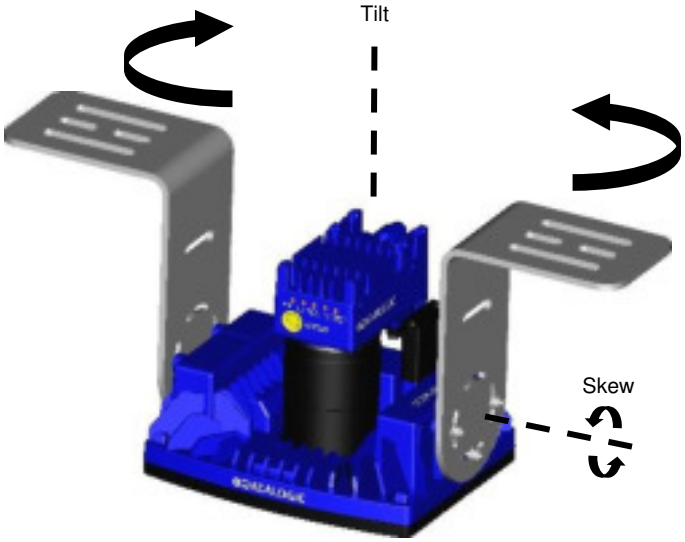

Figure 27 – Matrix 450N Positioning with Two LT-03x Brackets

In applications where the LT-03x Series Lighting Systems are not used, Matrix 450N can be mounted using the body mounting bracket accessory shown in the diagrams below; and you can obtain rotation on the various axes of the reader.

Figure 28 –Positioning with Matrix 450N Body Mounting Bracket (Back)

Matrix 450N is able to decode code labels at a variety of angles; however significant angular distortion may degrade reading performance.

When mounting Matrix 450N, take into consideration these **ideal** label position angles: **Pitch or Skew 10° to 20° and Tilt 0°.**

Note: Since Matrix 450N is omni-directional on the code plane, the Pitch and Skew angles have the same significance with respect to the code plane. However in some advanced code reading applications performance can be improved by modifying the Skew angle.

The **Pitch, Tilt and Skew** angles are represented in Figure 29. Follow the suggestions below for the best orientation:

Position the reader in order to avoid the direct reflection of the light emitted by the Matrix 450N reader; it is advised to **assure at least 10°** for the Skew angle.

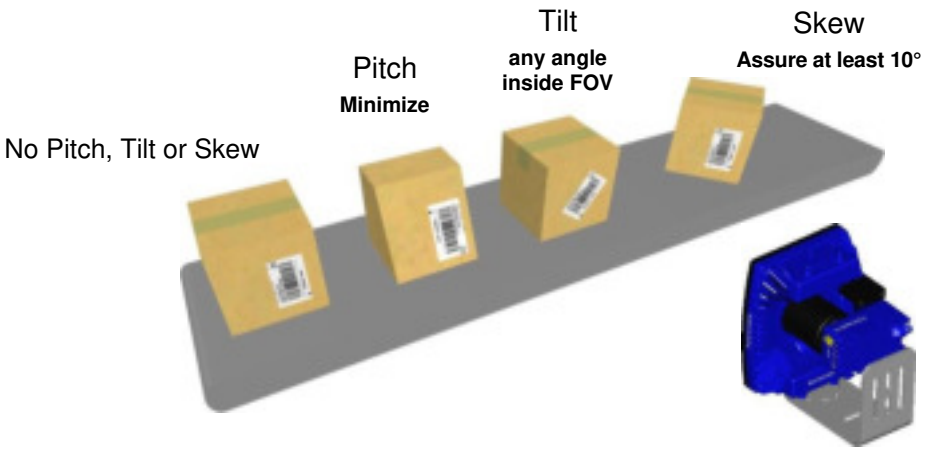

Figure 29 – Pitch Tilt and Skew Angles

In some cases, such as low contrast or low illumination, it can be useful to use a **Pitch or Skew** angle = 0°.

Matrix 450N can read labels with any tilt angle.

See chp. 6 for FOV vs. Reading Distance considerations.

3.4 MOUNTING WITH EMK MIRRORS

Accessory EMK series External Deflection Mirrors can be mounted in all applications where it is not practical to use the full DOF of the reader. In these cases a more compact reading station can be constructed. This is particularly useful in side reading applications.

The following paragraphs describe common mounting positions which help maintain reader to mirror alignment, however many variations can be constructed.

NOTE: For all of the following mounting examples, the positioning distances are not given since they depend on the application and characteristics of the reader, (lens, focus, etc.). Follow your application drawings for this information.

CAUTION: Do not mount the reader so far from the mirror that the reading area extends outside of the mirror surface.

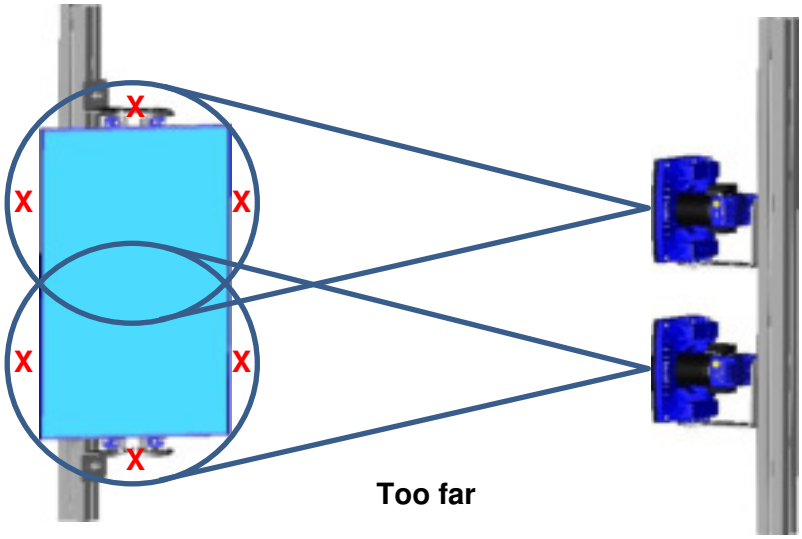

The EMK Mirror Bracket has some pre-defined skew angle slots to facilitate mounting. **These are the angles that will be projected onto the conveyor surface (reflection angles).**

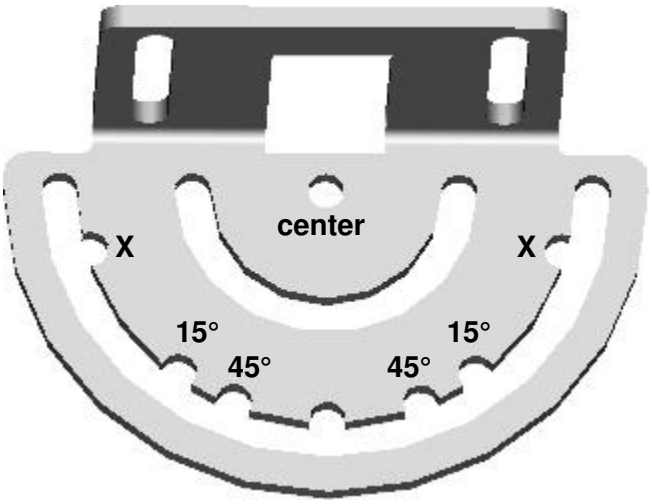

Figure 30 – Mirror Mounting Bracket

3.4.1 EMK-380 Side Mount – Standard

Matrix 450N and EMK-380 Mirror alignment is maintained when the EMK is mounted directly to the frame profiles. The skew angle is made at the mirror instead of at the reader.

1. Mount the mirror brackets to the profiles with one bolt in the center position and one bolt in the outer ring.
2. Rotate the mirror brackets so that the 15° skew angle slot is aligned with the profile channel, (see the figure below).
3. Mount the Matrix 450N reader through the center slots of the L-bracket to the profile.
4. Move the mirror assembly to the correct distance from the reader according to your application.
5. Move the Matrix 450N reader vertically to center it on the mirror.
6. Tighten the bolts.

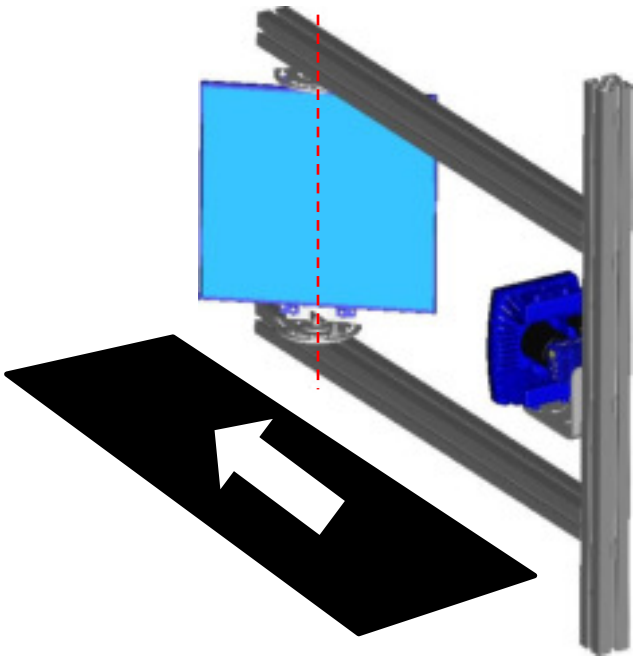

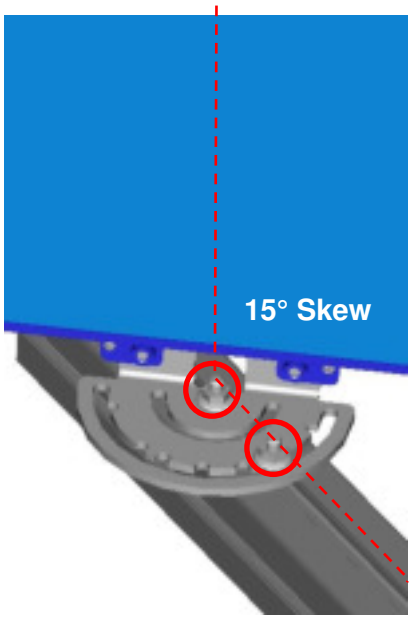

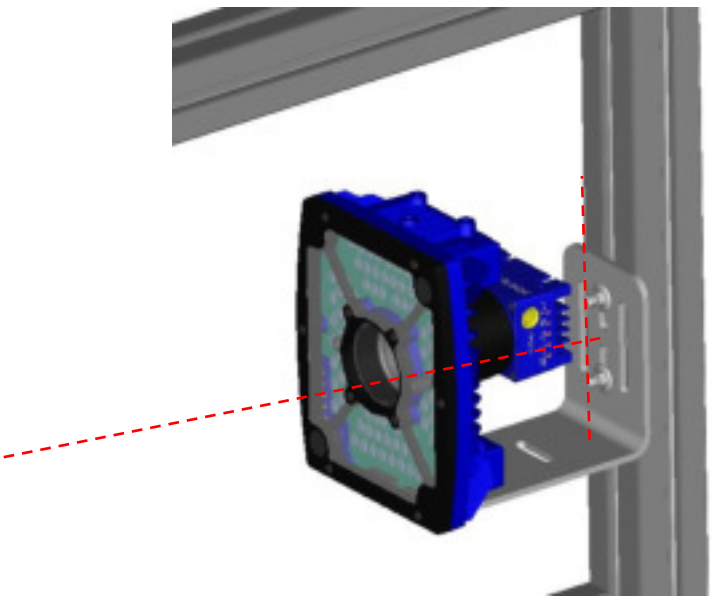

3.4.2 EMK-380 Side Mount - Alternative

An alternative mounting solution is to use the BK-90-040 brackets included in the package. Matrix 450N and EMK-380 Mirror alignment is obtained when the EMK is centered to the frame profiles as shown in the figures below. These brackets also provide the freedom of applying offsets to the mirror where necessary.

1. Mount and center the BK-90-040 brackets on the vertical profile.
2. Mount the mirror brackets to the BK-90-040 brackets with one bolt in the center position and one bolt in the outer ring.
3. Rotate the mirror brackets so that the 15° skew angle slot is aligned with the profile channel, (see the figure below).
4. Mount the Matrix 450N reader through the center slots of the L-bracket to the profile.
5. Move the mirror assembly to the correct distance from the reader according to your application.
6. Position the Matrix 450N reader vertically to center it on the mirror.
7. Tighten the bolts.

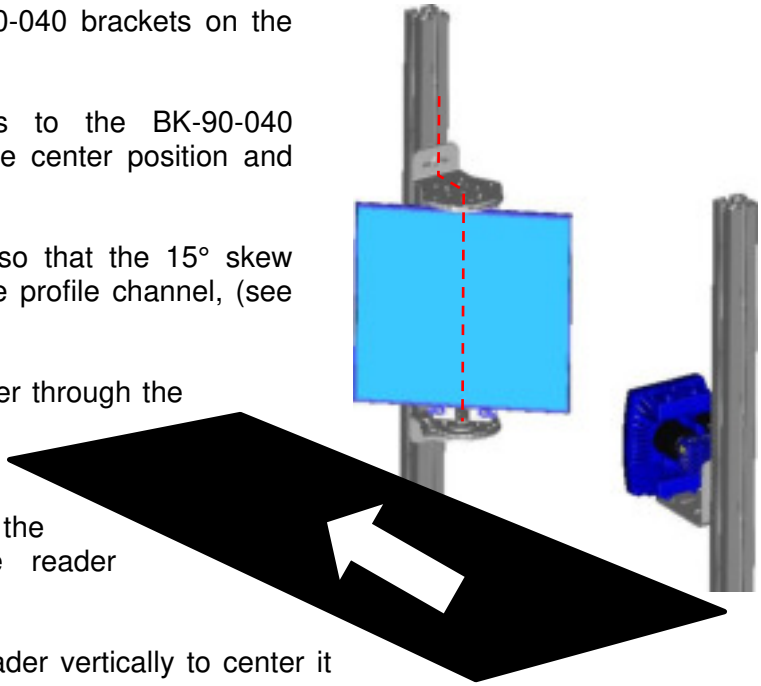

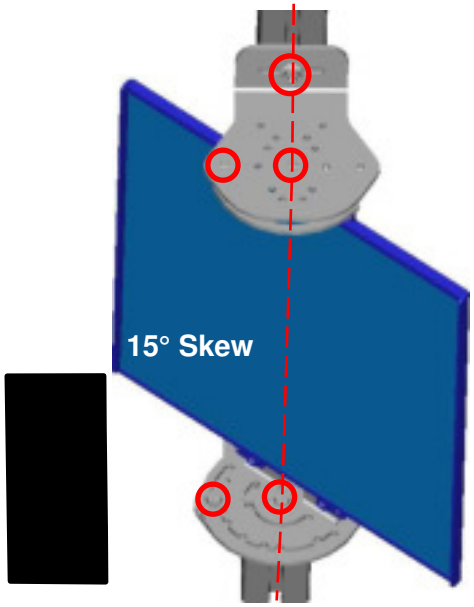

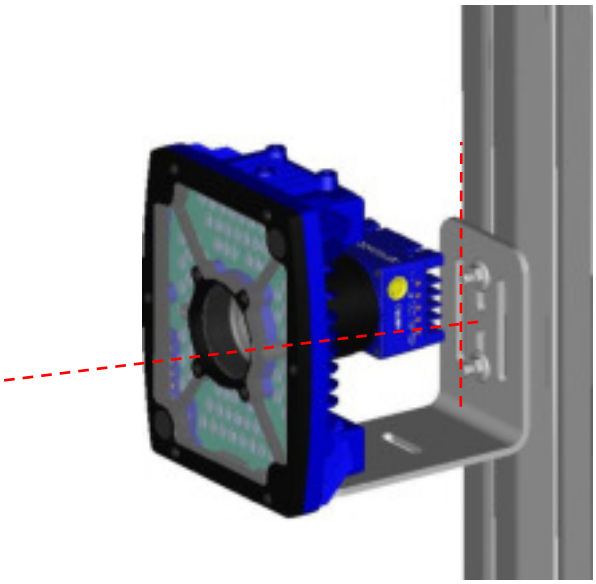

3.4.3 EMK-600 Side Mount - Standard

The EMK-600 mirror can be used together with two Matrix 450N readers in applications where a larger Field of View (FoV) is required. Matrix 450N and EMK-600 Mirror alignment is maintained when the EMK is mounted directly to the frame profiles. The skew angle is made at the mirror instead of at the reader.

1. Mount the mirror brackets to the profiles with one bolt in the center position and one bolt in the outer ring.
2. Rotate the mirror brackets so that the 15° skew angle slot is aligned with the profile channel, (see the figure below).
3. Mount the Matrix 450N readers through the center slots of the L-brackets to the profile.
4. Move the mirror assembly to the correct distance from the readers according to your application.
5. Position the Matrix 450N readers vertically to center them on the mirror.
6. Tighten the bolts.

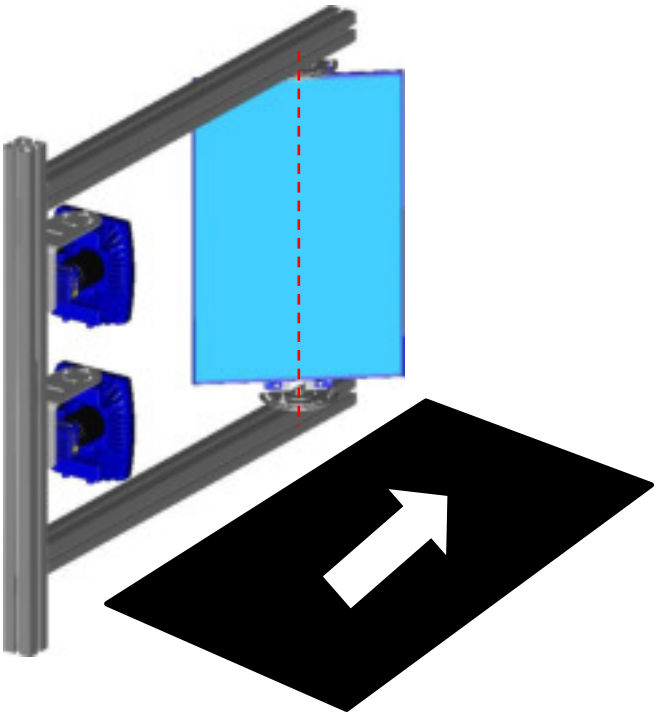

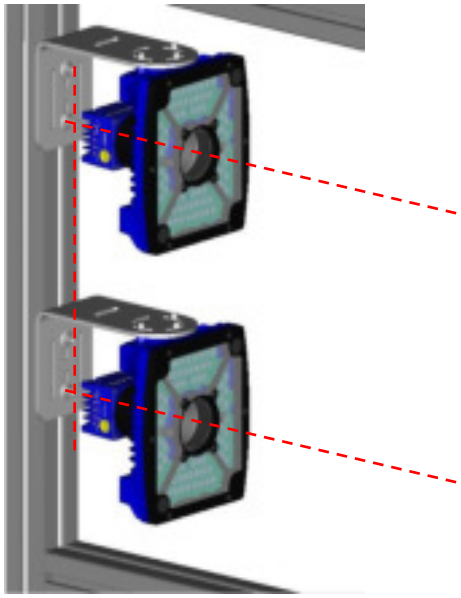

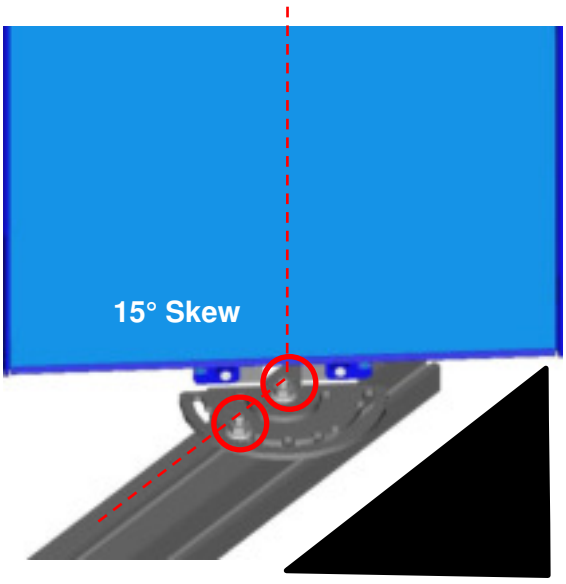

3.4.4 EMK-600 Side Mount - Alternative

An alternative mounting solution is to use the BK-90-040 brackets (separate accessory). Matrix 450Ns and EMK-600 Mirror alignment is obtained when the EMK is centered to the frame profiles as shown in the figures below. These brackets also provide the freedom of applying offsets to the mirror where necessary.

NOTE: The BK-90-040 brackets are a separate accessory for alternative mounting of the EMK-600 Deflection Mirror.

1. Mount and center the BK-90-040 brackets on the vertical profile.
2. Mount the mirror brackets to the BK-90-040 brackets with one bolt in the center position and one bolt in the outer ring.
3. Rotate the mirror brackets so that the 15° skew angle slot is aligned with the profile channel, (see the figure below).
4. Mount the Matrix 450N readers through the center slots of the L-brackets to the profile.
5. Move the mirror assembly to the correct distance from the readers according to your application.
6. Position the Matrix 450N readers vertically to center them according to your application drawings.
7. Tighten the bolts.

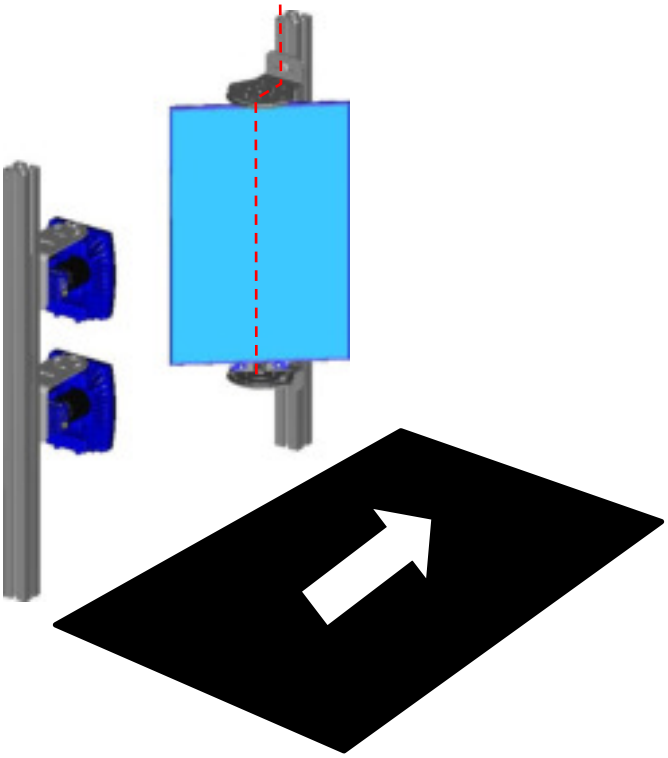

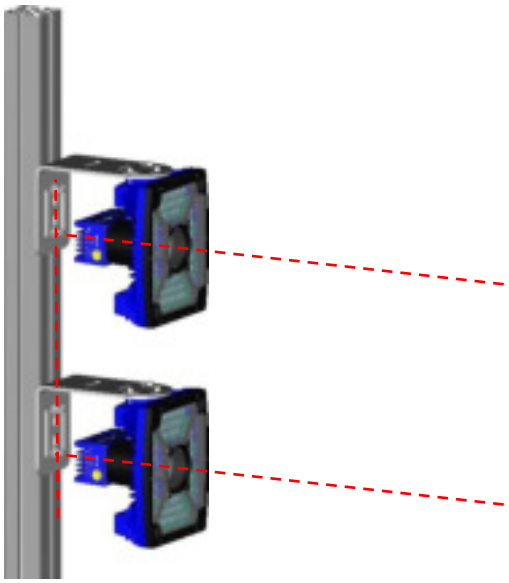

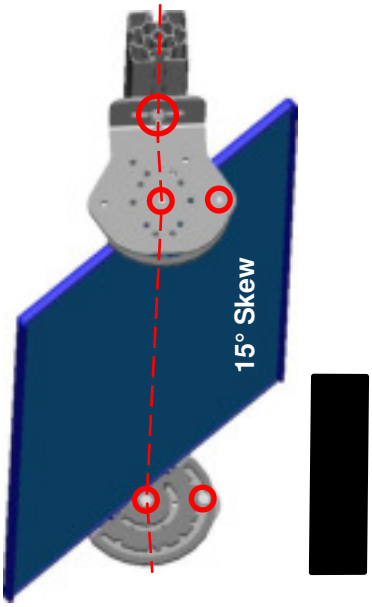

4 CBX ELECTRICAL CONNECTIONS

All Matrix 450N models can be connected to a CBX connection box through one of the available **CAB-MSxx** accessory cables. These accessory cables terminate in a 19-pin connector on the Matrix 450N side and in a 25-pin male D-sub connector on the CBX side.

We recommend making system connections through one of the CBX connection boxes since they offer the advantages of easy connection, easy device replacement, and filtered reference signals.

NOTE: If you require direct wiring to the reader the connections are the same as shown in this chapter with the exception of the digital Outputs. Direct wiring details are indicated in Appendix A.

The table below gives the pinout of the CBX100/500 terminal block connectors. Use this pinout when the Matrix 450N reader is connected by means of the CBX100/500:

CBX100/500 Terminal Block Connectors		
Input Power		
Vdc	Power Supply Input Voltage +	
GND	Power Supply Input Voltage -	
Earth	Protection Earth Ground	
Inputs		
+V	Power Source – External Trigger	
I1A	External Trigger A (polarity insensitive)	
I1B	External Trigger B (polarity insensitive)	
-V	Power Reference – External Trigger	
+V	Power Source – Inputs	
I2A	Input 2 A (polarity insensitive)	
I2B	Input 2 B (polarity insensitive)	
-V	Power Reference – Inputs	
Outputs		
+V	Power Source - Outputs	
-V	Power Reference - Outputs	
O1+	Output 1 +	
O1-	Output 1 -	
O2+	Output 2 +	
O2-	Output 2 -	
Auxiliary Interface		
TX	Auxiliary Interface TX	
RX	Auxiliary Interface RX	
SGND	Auxiliary Interface Reference	
ID-NET		
REF	Network Reference	
ID+	ID-NET network +	
ID-	ID-NET network -	
Shield	Network Cable Shield	
Main Interface		
	RS232	**RS422 Full-Duplex**
	TX	TX+
	RX	*RX+
	-	TX-
	-	*RX-
	SGND	SGND

* Do not leave floating, see par. 4.2.2 for connection details.

NOTE: To avoid electromagnetic interference when the reader is connected to a CBX connection box, verify the jumper positions in the CBX as indicated in its Installation Manual.

4.1 POWER SUPPLY

NOTE: Matrix 450N does not support sourcing power towards the CBX through the CBX "power from device" source jumper setting. Power must be supplied to the CBX as shown below.

To power the reader and/or I/O devices through the CBX, power must be supplied to the CBX100/500 spring clamp terminal pins as shown in Figure 31:

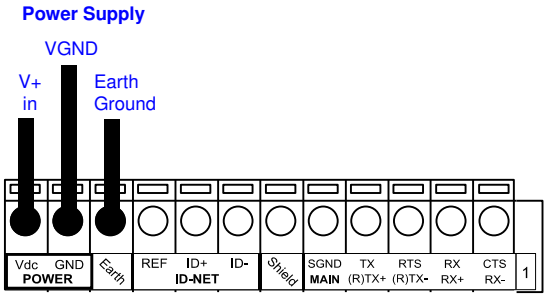

Figure 31 - Power Supply Connections

The power must be between 10 and 30 Vdc only.

It is recommended to connect the device CHASSIS to earth ground (Earth) by setting the appropriate jumper in the CBX connection box. See the CBX Installation Manual for details.

4.1.1 Recommended Power Supplies

The following accessory power supplies are recommended for Matrix 450N + LT-03x assemblies:

Accessory Power Supplies	
Power Supply	**Number of Matrix 450N+LT-03xs Supported**
PG-120	1
PWR-120	1
PWR-480B	4

NOTE: If using separate power sources for LT-03x and Matrix 450N, make sure that LT-03x is powered up before Matrix 450N in order to be correctly recognized.

If using customer supplied power, keep in mind the following worst case peak current consumption diagram. Depending on the application, the power supply must be able to support up to 12 A current peaks at the frame rate frequency. The frame rate increases if **Image Cropping** is used, see the worst case example below.

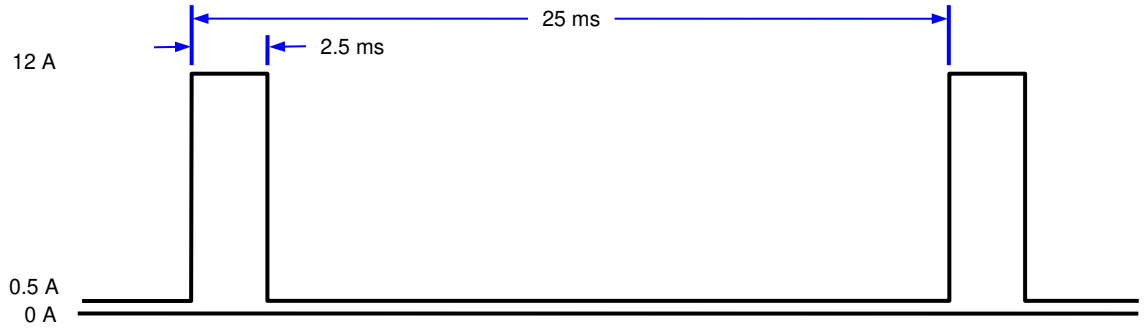

Figure 32 – Worst Case Peak Current Consumption

4.2 MAIN SERIAL INTERFACE

CAUTION: Do not connect to the Main Interface spring clamp terminals if using Host Interface Modules (Fieldbus) with the CBX500.

The signals relative to the following serial interface types are available on the CBX spring clamp terminal blocks.

The main serial interface type and its parameters (baud rate, data bits, etc.) can be defined by the user via DL.CODE software. For more details refer to the Help On Line page of the Reading Phase step (Channels) in DL.CODE.

Details regarding the connections and use of the interfaces are given in the next paragraphs.

4.2.1 RS232 Interface

The RS232 interface is generally used for Point-to-Point connections. When it is connected to the host computer it allows transmission of code data.

The following pins are used for RS232 interface connection:

CBX100/500	Function
TX	Transmit Data
RX	Receive Data
SGND	Signal Ground

It is always advisable to use shielded cables. The overall maximum cable length must be less than 15 m (49.2 ft).

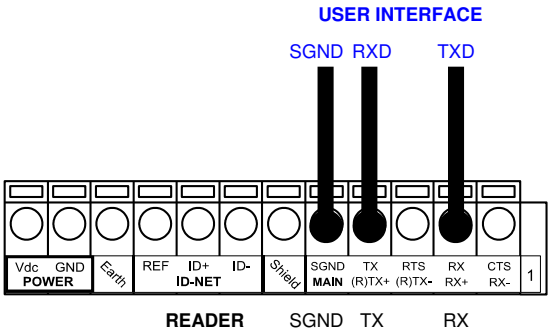

Figure 33 – RS232 Main Interface Connections

4.2.2 RS422 Full-Duplex Interface

The RS422 full-duplex (5 wires + shield) interface is used for non-polled communication protocols in point-to-point connections over longer distances (max 1200 m / 3940 ft) than those acceptable for RS232 communications or in electrically noisy environments.

The CBX pinout follows:

CBX100/500	Function
TX+	RS422 Transmit Data +
RX+	RS422 Receive Data +
TX-	RS422 Transmit Data -
RX-	RS422 Receive Data -
SGND	Signal Ground

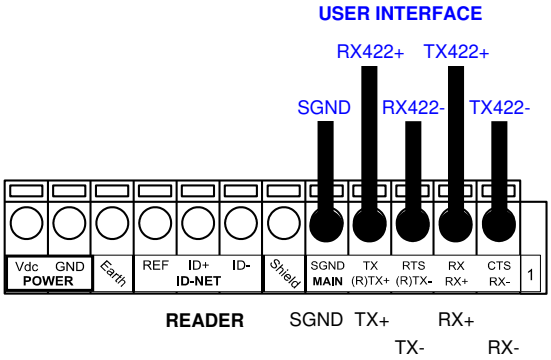

Figure 34 - RS422 Full-duplex Connections

NOTE: For applications that do not use RS422 **transmission to the reader** (terminal block RX+ and RX- signals), do not leave these lines floating but connect them to SGND as shown below.

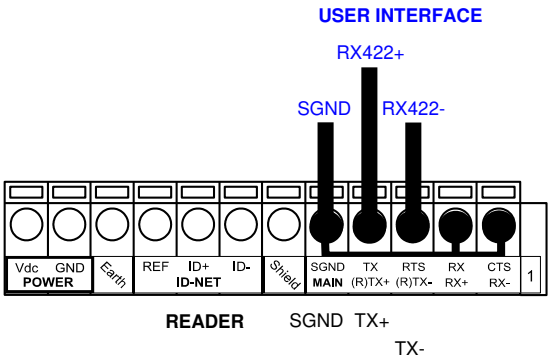

Figure 35 - RS422 Full-duplex Connections using Only TX Signals to Host

4.3 ID-NET INTERFACE

CBX100/500	Function
Shield	Network Cable Shield
ID+	ID-NET network +
ID-	ID-NET network -
REF	Network Reference

4.3.1 ID-NET Cables

The following instructions are referred to Figure 37, Figure 38 and Figure 39.

- The general cable type specifications are: CAT5 twisted pair + additional CAT5 twisted pair, shielded cable AWG 24 (or AWG 22) stranded flexible.

  We recommend using DeviceNet cables (drop or trunk type) to the following reference standards:

  AN50325 – IEC 62026

  UL STYLE 2502 80°C 30V
- Cable Shield MUST be connected to earth ground ONLY at the Master.
- NEVER use ID-NET cable shield as common reference.
- The ID-NET max cable length depends on the baudrate used, (see the Baudrate Table below).
- For Common Power Connections use only 2 wires (ID+ and ID-).
  - DC Voltage Power cable (Vdc – GND) should be handled as a signal cable (i.e. do not put it together with AC cable):
  - Wire dimensioning must be checked in order to avoid voltage drops greater than 0.8 Volts.
  - Cable should lie down as near as possible to the ID-NET cable (avoiding wide loops between them).
- Reader's chassis may be connected to earth.
- Network inside the same building.

Baudrate Table				
Baud Rate	125 kbps	250 kbps	**500 kbps**	1Mbps
Cable Length	1200 m	900 m	**700 m**	*

* Application dependent, contact your Datalogic Automation representative for details.

NOTE: The default ID-NET baudrate is 500 kbps. Lower ID-NET baudrates allow longer cable lengths.

4.3.2 ID-NET Response Time

The following figure shows the response time of the ID-NET network. This time is defined as the period between the Trigger activation and the beginning of data transmission to the Host.

Figure 36 – ID-NET Response Time

CONDITIONS:

- ID-NET M/S Synchronized layout
- message length = 50 bytes per node

4.3.3 ID-NET Network Termination

The network must be properly terminated in the first and last reader of the network. This is done by setting the ID-NET Termination Resistance Switch in the CBX100/500 to ON.

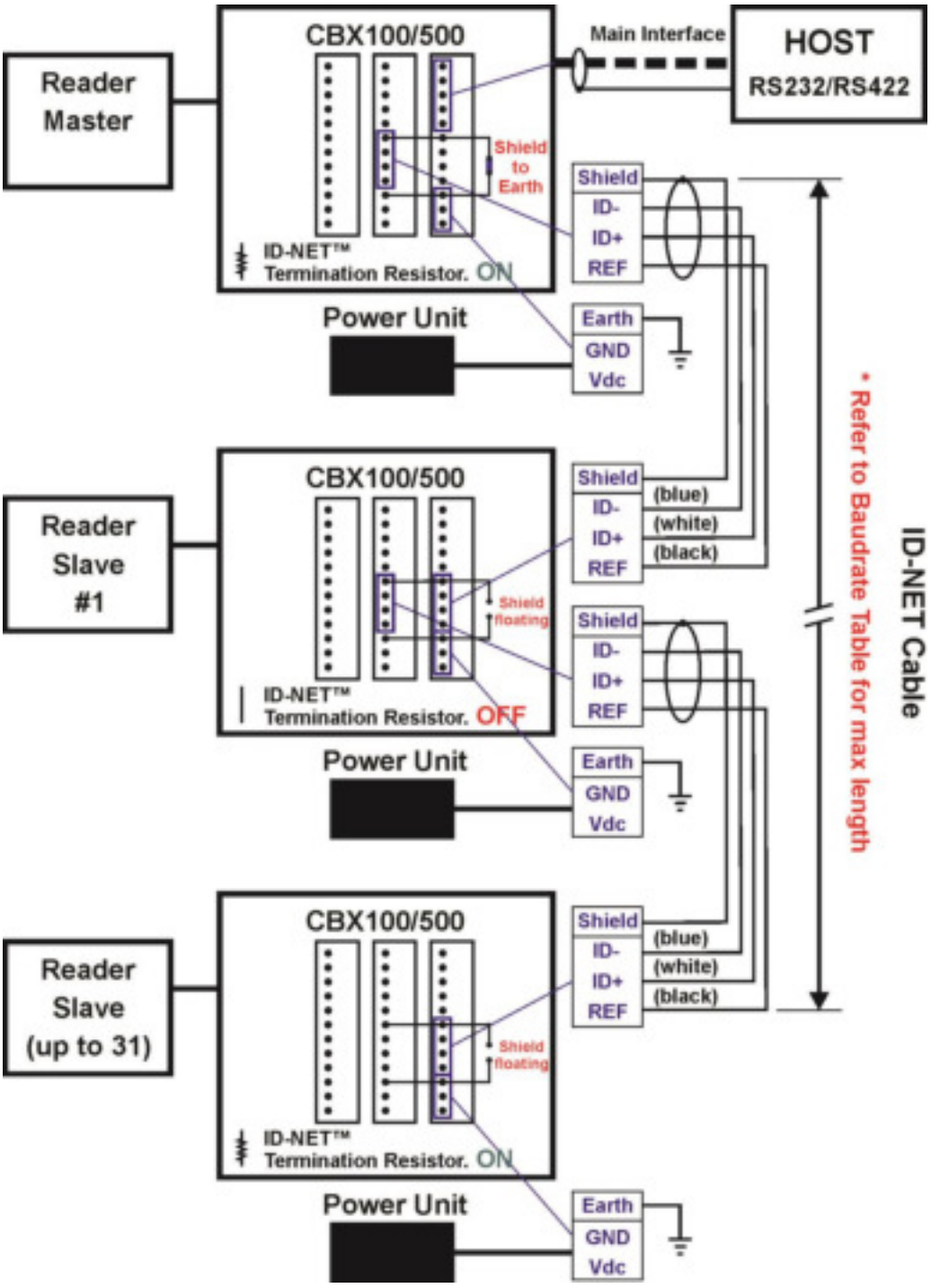

Figure 37 – ID-NET Network Connections with isolated power blocks

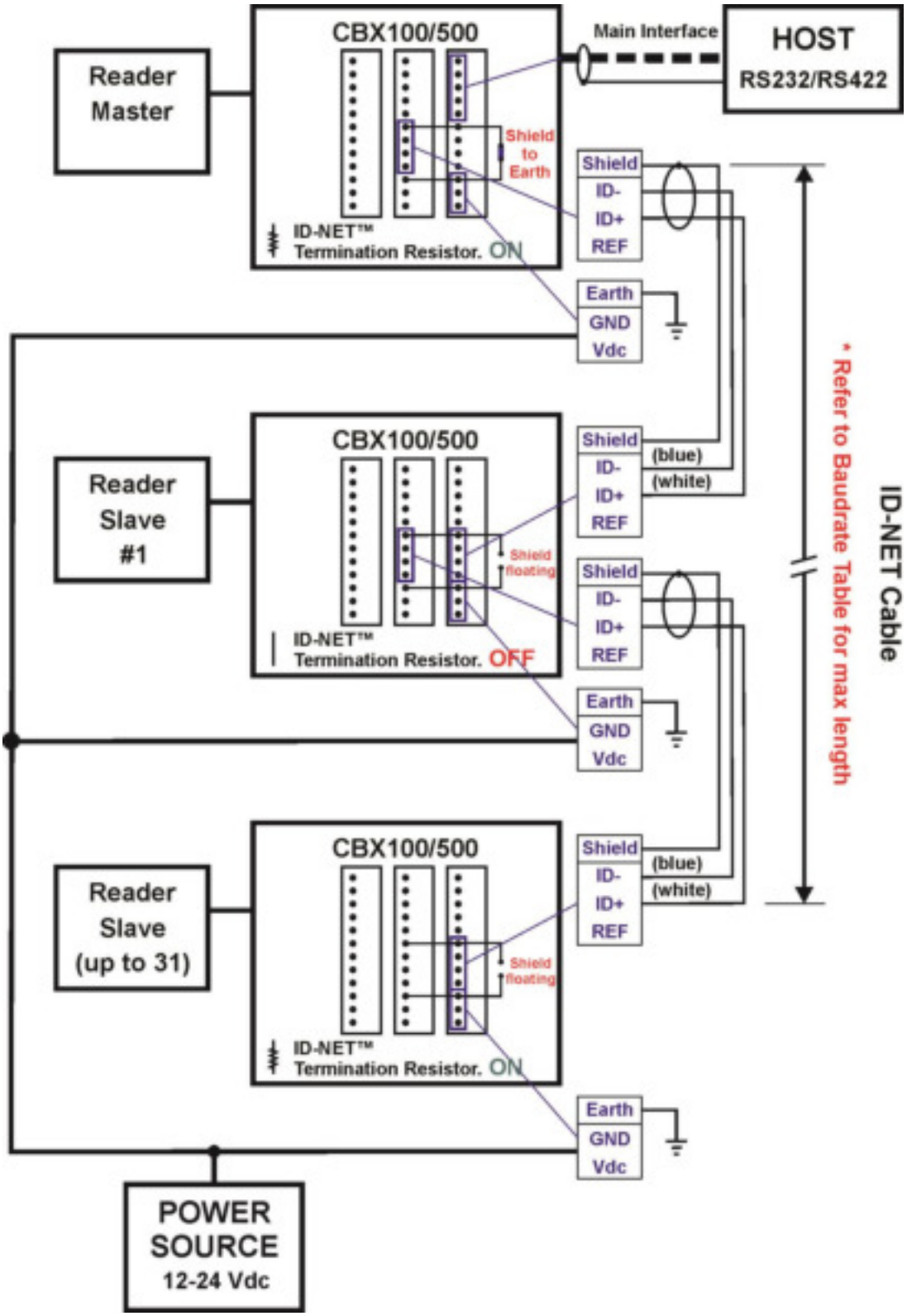

Figure 38 - ID-NET Network Connections with Common Power Branch Network

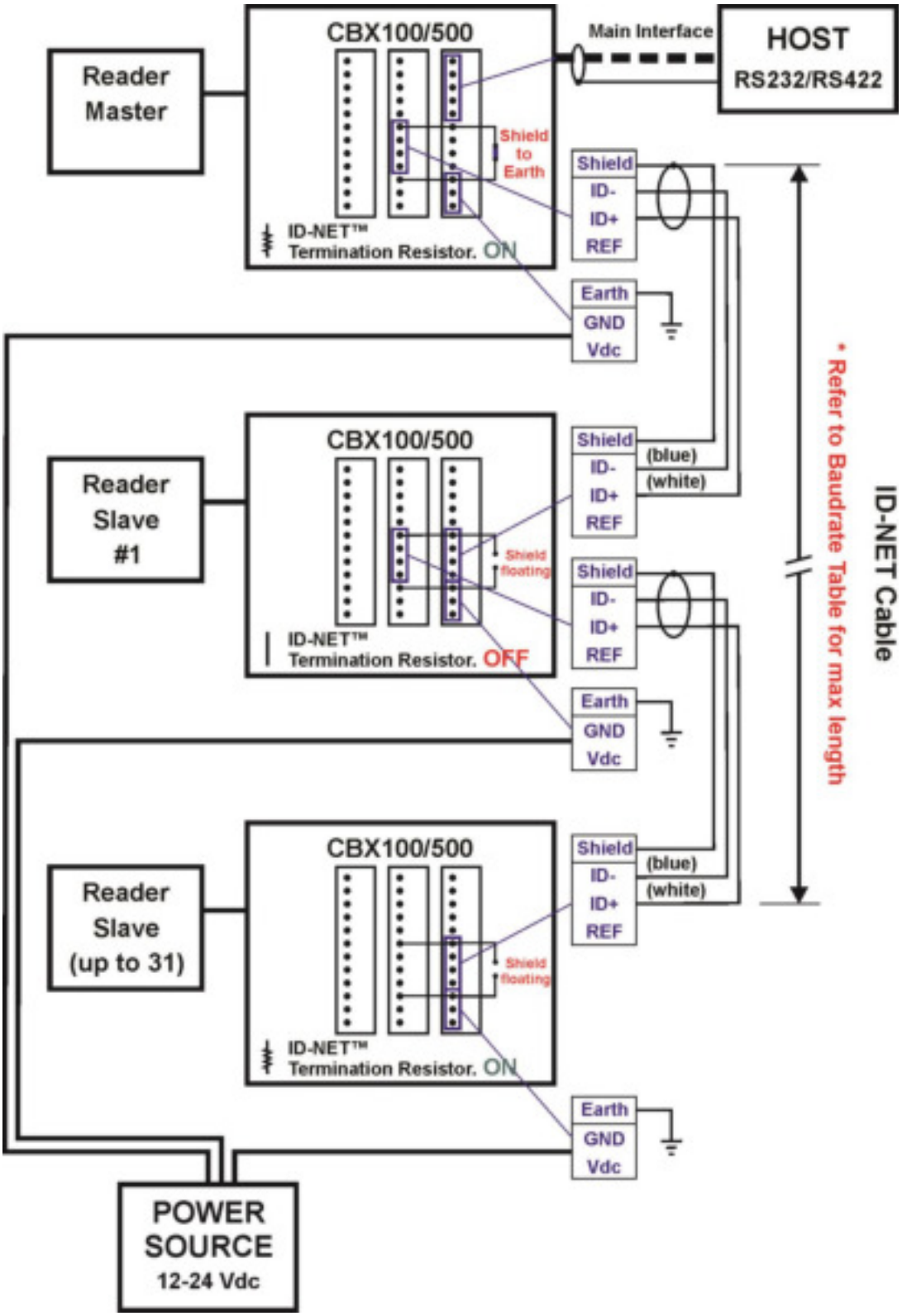

Figure 39 – ID-NET Network Connections with Common Power Star Network

4.4 AUXILIARY RS232 INTERFACE

The RS232 auxiliary interface is available for Point-to-Point connections. When it is connected to the host computer it allows transmission of code data.

The parameters relative to the aux interface (baud rate, data bits, etc.) can be defined through the Reading Phase step (Channels) in DL.CODE.

The 9-pin female Auxiliary Interface connector inside the CBX is the preferred connector for temporary communication monitoring.

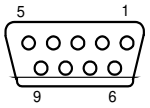

Figure 40 - 9-pin female connector

If permanent system wiring is required, the following pins are used to connect the RS232 auxiliary interface:

CBX100/500	Function
RX	Auxiliary Interface Receive Data
TX	Auxiliary Interface Transmit Data
SGND	Auxiliary Interface Reference

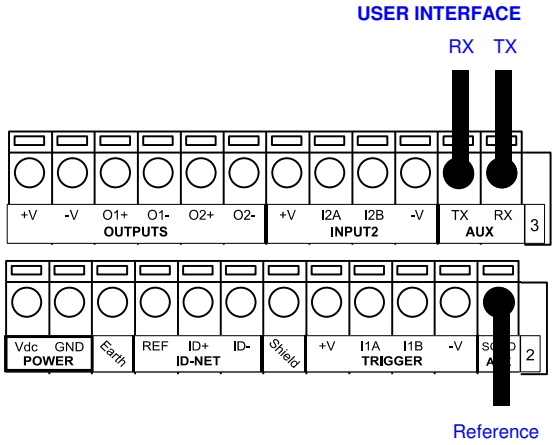

Figure 41 - RS232 Auxiliary Interface Connections

NOTE: Do not connect the Aux Interface to the CBX spring clamp connectors and the 9-pin connector simultaneously.

4.5 INPUTS

There are two optocoupled polarity insensitive inputs available on the reader: Input 1 (External Trigger) and Input 2, a generic input:

The External Trigger can be used in One Shot Mode or in Phase Mode. Its main functions are:

- acquisition trigger in One Shot Mode
- reading phase-ON/reading phase-OFF command in Phase Mode

The main functions of the general purpose Input 2 are:

- second external trigger in Phase Mode
- match code storage command when the Match Code option is enabled

The electrical features of both inputs are:

V_{AB} = 30 Vdc max.

I_{IN} = 10 mA (reader) + 12 mA (CBX) max.

The active state of these inputs is selected in software.

An anti-disturbance filter, by default, is implemented in software on both inputs. The value can be changed through the software parameter Debounce Filter. See the Help On Line page of the Reading Phase step (Inputs) in DL.CODE for further details on these parameters.

These inputs are optocoupled and can be driven by both NPN and PNP type commands.

NOTE: Polarity insensitive inputs assure full functionality even if pins A and B are exchanged.

The connections are indicated in the following diagrams:

CBX100/500	Function
+V	Power Source - External Trigger
I1A	External Trigger A (polarity insensitive)
I1B	External Trigger B (polarity insensitive)
-V	Power Reference - External Trigger

The yellow Trigger LED (Figure 21, 5) is on when the active state of the External Trigger corresponds to ON.

EXTERNAL TRIGGER INPUT CONNECTIONS USING CBX POWER

CAUTION: Power from the Vdc/GND spring clamps is available directly to the Input Device on the +V/-V spring clamps, and does not pass through the Power Switch (ON/OFF) inside the CBX. Disconnect the power supply when working inside the CBX.

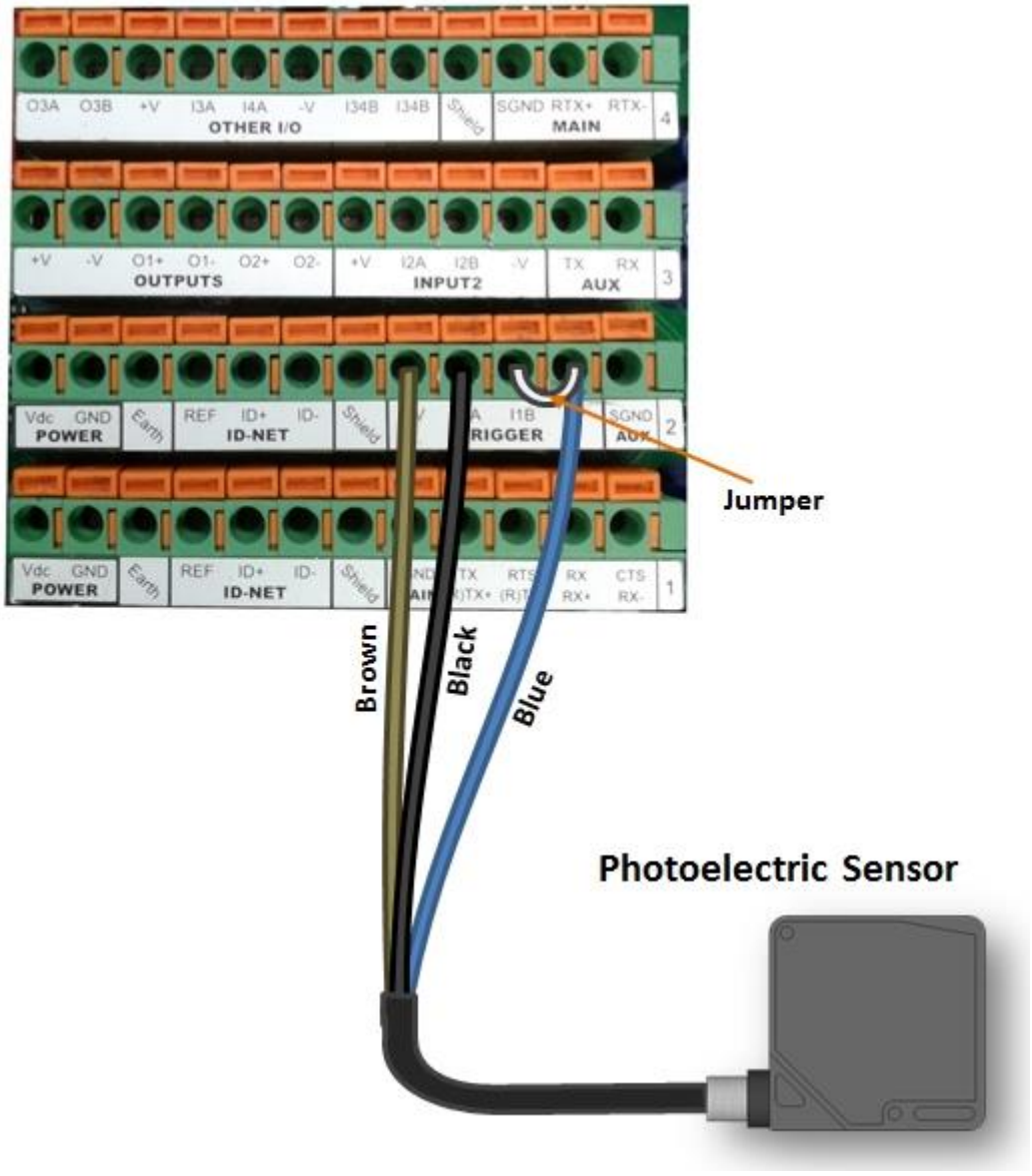

Figure 42 – PNP External Trigger Using CBX Power

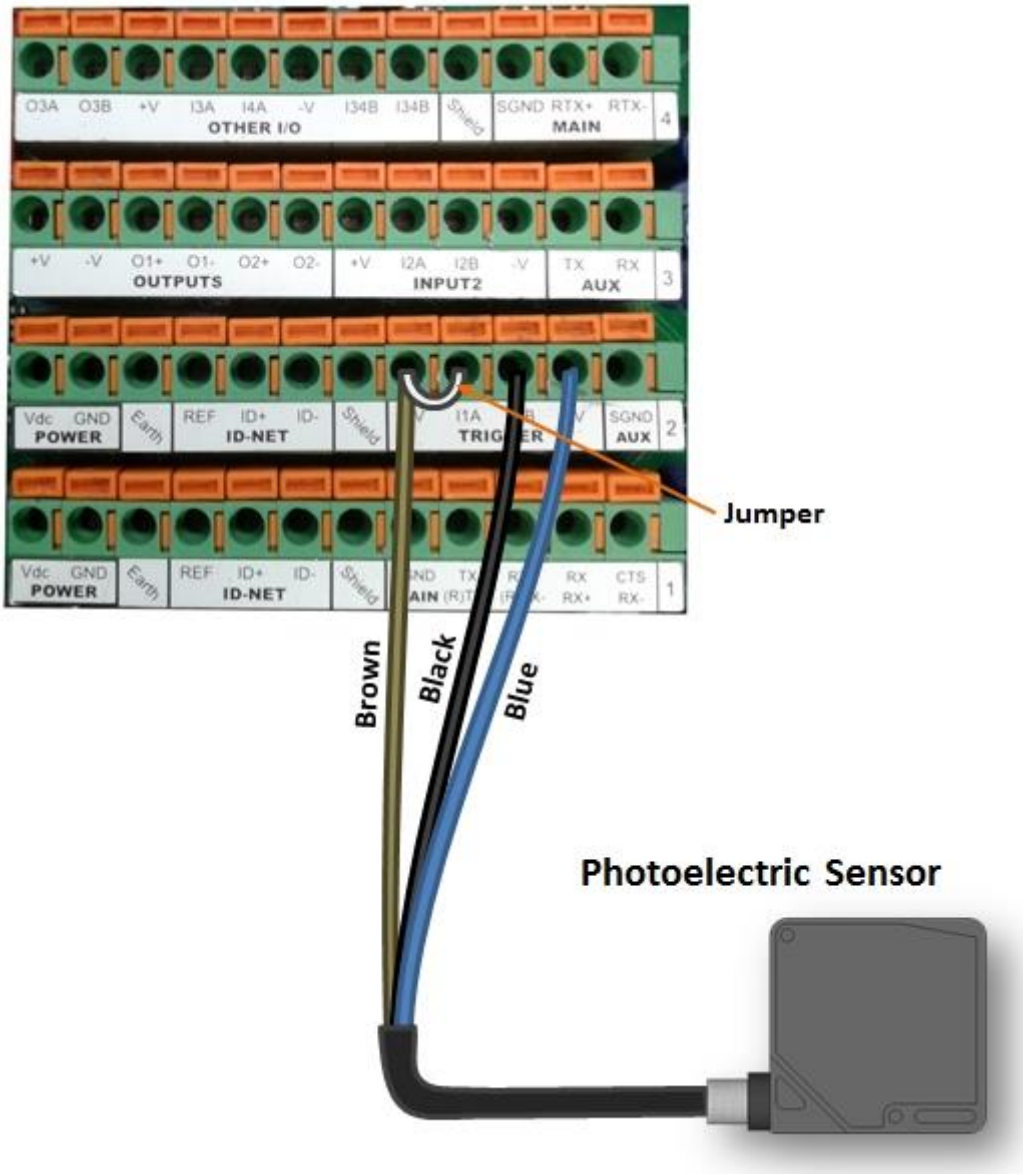

Figure 43 - NPN External Trigger Using CBX Power

EXTERNAL TRIGGER INPUT CONNECTIONS USING EXTERNAL POWER

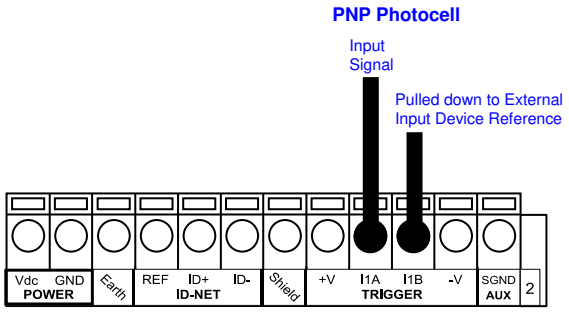

Figure 44 - PNP External Trigger Using External Power

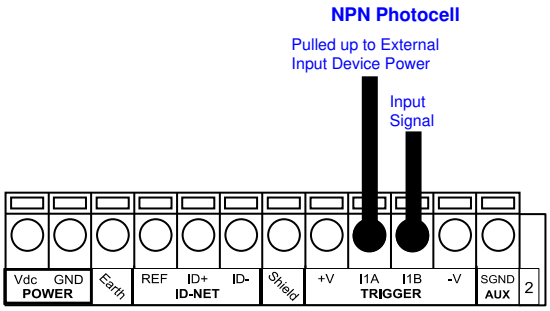

Figure 45 - NPN External Trigger Using External Power

CBX100/500	Function
+V	Power Source - Inputs
I2A	Input 2 A (polarity insensitive)
I2B	Input 2 B (polarity insensitive)
-V	Power Reference - Inputs

INPUT 2 CONNECTIONS USING CBX POWER

CAUTION: Power from the Vdc/GND spring clamps is available directly to the Input Device on the +V/-V spring clamps, and does not pass through the Power Switch (ON/OFF) inside the CBX. Disconnect the power supply when working inside the CBX.

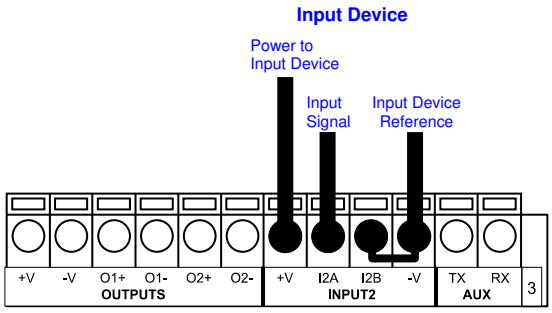

PNP Input 2 Using CBX Power

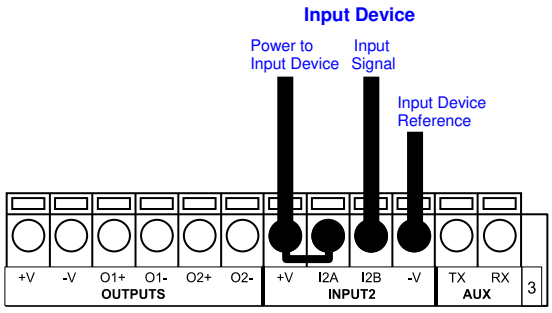

NPN Input 2 Using CBX Power

INPUT 2 CONNECTIONS USING EXTERNAL POWER

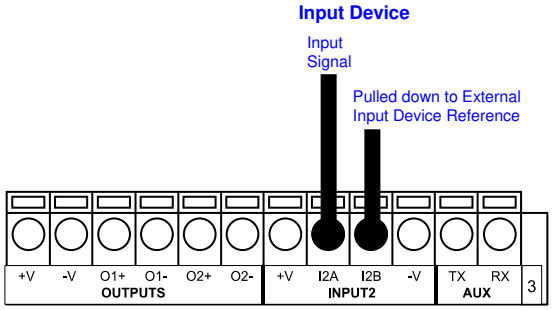

Figure 46 - PNP Input 2 Using External Power

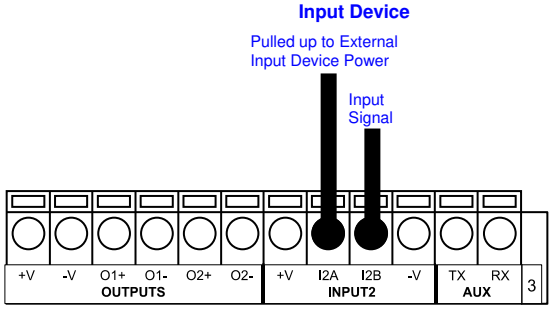

Figure 47 - NPN Input 2 Using External Power

4.6 OUTPUTS

Two optocoupled general purpose outputs are available. The meaning of the two outputs Output 1 and Output 2 can be defined by the user. They are typically used either to signal the data collection result.

CBX100/500	Function
+V	Power Source - Outputs
O1+	Output 1 +
O1-	Output 1 -
O2+	Output 2 +
O2-	Output 2 -
-V	Power Reference Outputs

The electrical features of the two outputs are the following:

V_{CE} = 30 Vdc max.

I_{CE} = 40 mA continuous max.; 130 mA pulsed max.

$V_{CE\ saturation}$ = 1 Vdc max. @ 10 mA

P_D = 90 mW Max. @ 50 °C ambient temp.

By default, Output 1 is associated with the No Read event, which activates when the code(s) signaled by the external trigger are not decoded, and Output 2 is associated with the Good Read event, which activates when all the selected codes are correctly decoded.

The output signals are fully programmable being determined by the configured Activation/Deactivation events, Deactivation Timeout or a combination of the two. Refer to the DL.CODE parameters Help On Line for further details.

OUTPUT 1 AND 2 CONNECTIONS USING CBX POWER

CAUTION: Power from the Vdc/GND spring clamps is available directly to the Output Device on the +V/-V spring clamps, and does not pass through the Power Switch (ON/OFF) inside the CBX. Disconnect the power supply when working inside the CBX.

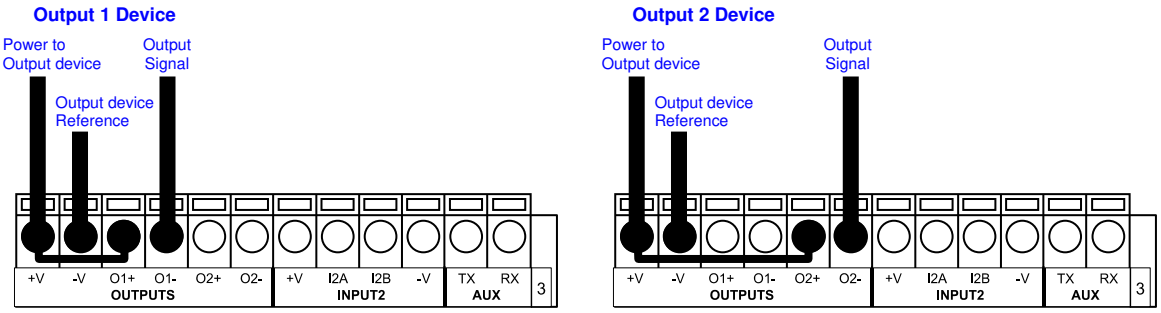

Figure 48 – PNP/Open Emitter Output Using CBX Power

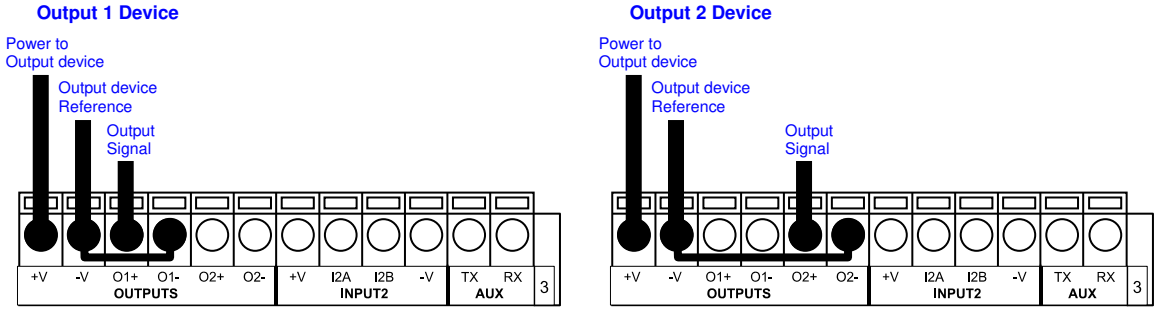

Figure 49 – NPN/Open Collector Output Using CBX Power

OUTPUT 1 AND 2 CONNECTIONS USING EXTERNAL POWER

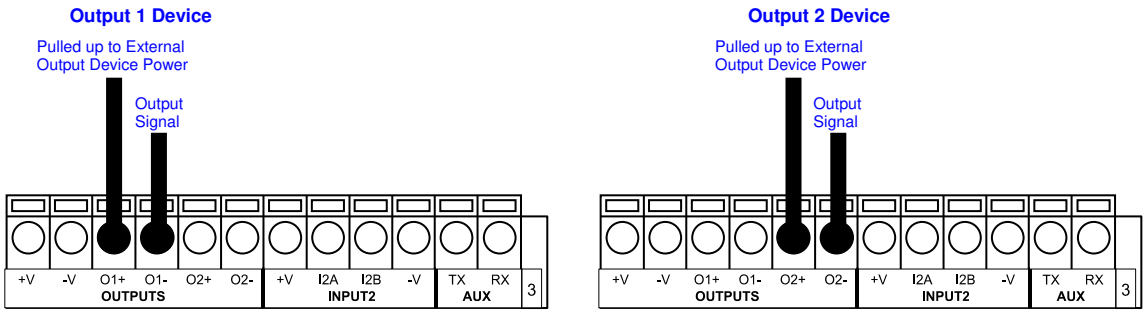

Figure 50 – PNP/Output Open Emitter Using External Power

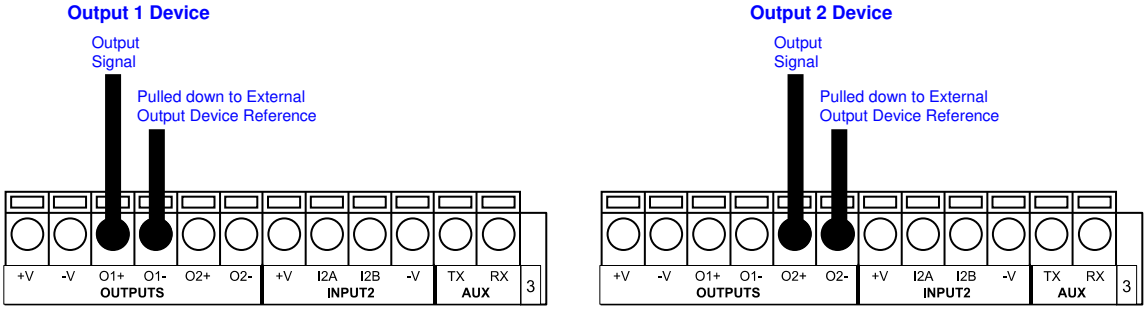

Figure 51 – NPN/Output Open Collector Using External Power

4.7 ON-BOARD GIGABIT ETHERNET INTERFACE

The on-board Gigabit Ethernet Interface can be used for TCP/IP communication with a remote or local host computer by connecting the reader to either a LAN or directly to a host PC. There is no need to use a crossover adapter since Matrix 450N incorporates an auto-cross function.

A **CAB-GE0x** cable can be used to connect to a LAN.

On the Matrix 450N on-board Gigabit Ethernet interface the following communication channels are available:

- TCP Client
- TCP Server
- UDP Client
- FTP Client

The following Fieldbus protocols are also available over the on-board Gigabit Ethernet interface:

- EtherNet/IP
- Modbus TCP Client

For further details refer to the Help On Line page of the Reading Phase step (Channels) and (Fieldbuses) in DL.CODE.

4.8 USER INTERFACE – SERIAL HOST

The following table contains the pinout for standard RS232 PC Host interface. For other user interface types please refer to their own manual.

RS232 PC-side connections			
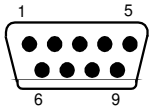 9-pin male connector		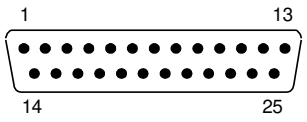 25-pin male connector	
Pin	**Name**	**Pin**	**Name**
2	RX	3	RX
3	TX	2	TX
5	GND	7	GND

5 TYPICAL LAYOUTS

The following typical layouts refer to system hardware configurations. However, they also require the correct setup of the software configuration parameters. Dotted lines in the figures refer to optional hardware configurations within the particular layout.

NOTE: All software configurations are made through DL.CODE which connects to the reader through the on-board Ethernet interface.

NOTE: DL.CODE now supports several different multi device configuration types using the PASS-THROUGH configuration. In particular this feature allows MULTIDATA ID-NET network configurations to be made. Master/Slave SYNCHRONIZED ID-NET network configurations are also configurable as before.

NOTE: The Master/Slave Role is only significant for the Internal ID-NET Network. If your layout doesn't use the ID-NET network then the device's Role is not significant and can be ignored.

5.1 ETHERNET CONNECTION

The Ethernet connection is possible in two different layouts.

In a Point-to-Point layout the reader is connected to a local host by using a **CAB-GE0x** Gigabit Etherenet cable. There is no need to use a crossover adapter since Matrix 450N incorporates an autocross function.

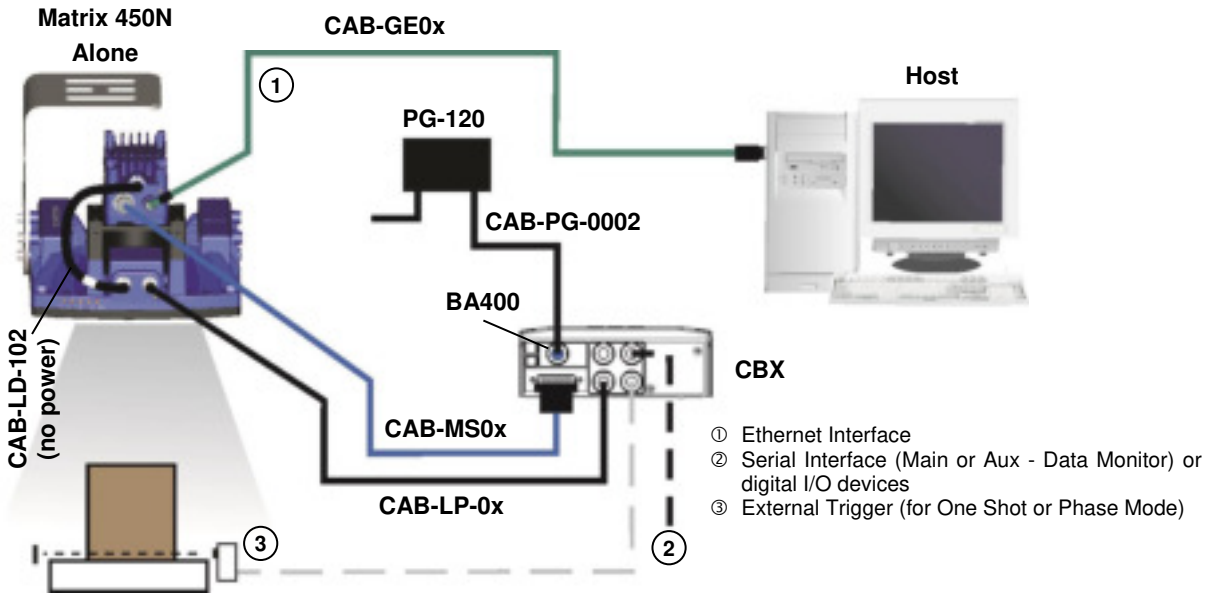

Figure 52 - Ethernet Point-to-Point Layout – One Shot or Phase Mode

All devices always support multiple output channels (i.e. for data monitoring).

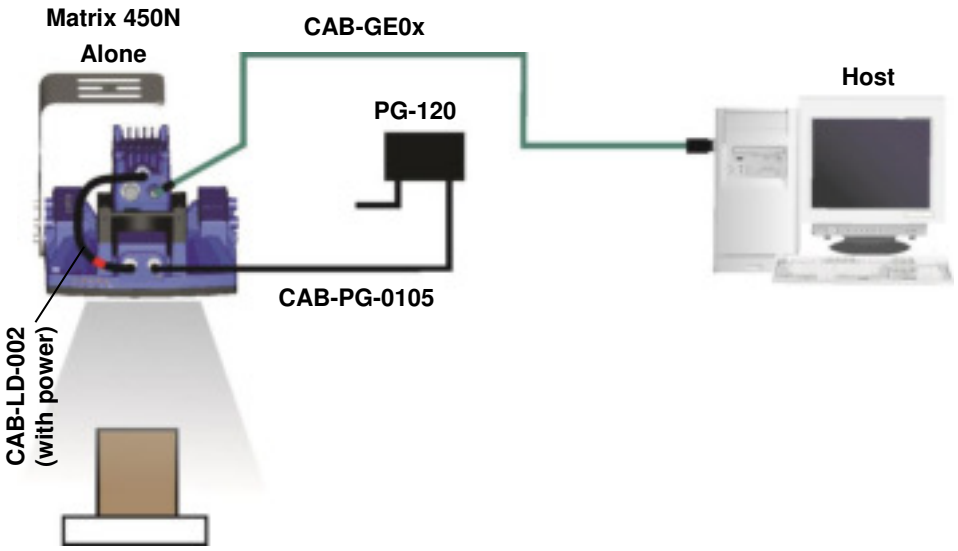

Figure 53 - Ethernet Point-to-Point Layout – Continuous Mode

When using a Local Area Network (LAN), one or more Matrix 450N readers can be connected to the same network by using **CAB-GE0x** Gigabit Ethernet cables.

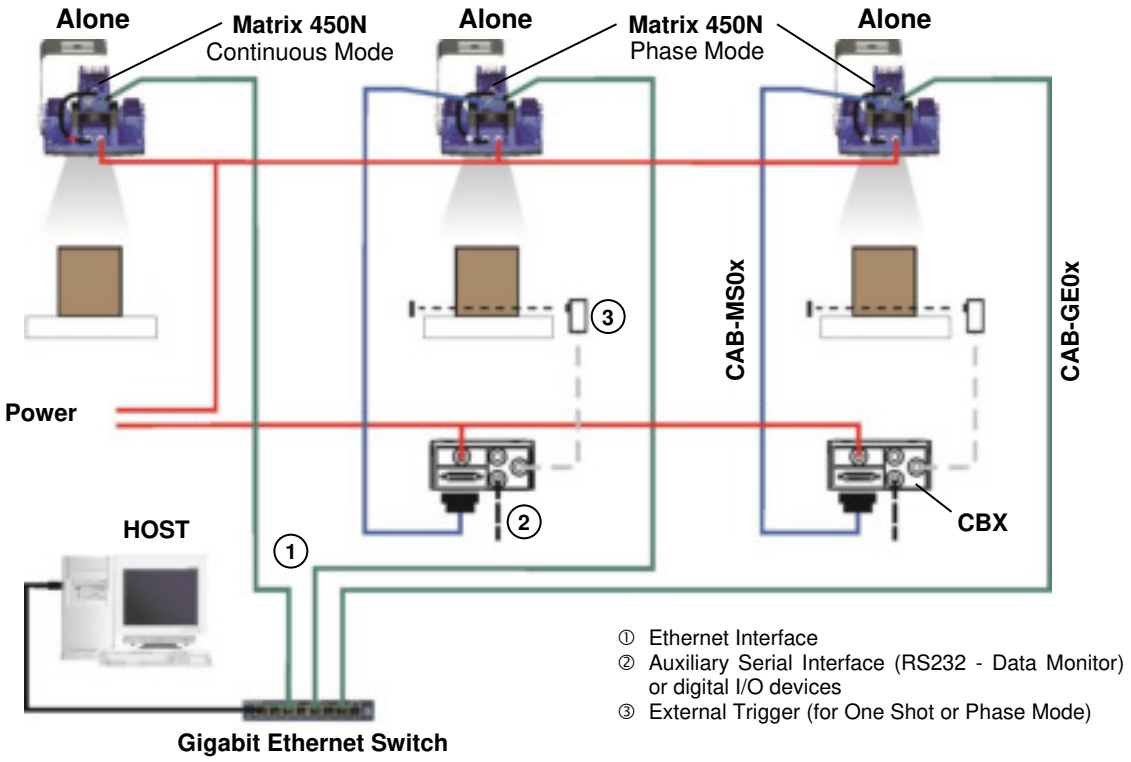

Figure 54 - Ethernet Network Layout

All devices always support multiple output channels (i.e. for data monitoring).

5.2 SERIAL CONNECTION

In this layout the data is transmitted to the Host on the main serial interface. The Ethernet interface can be used for reader configuration by connecting a laptop computer running DL.CODE.

Data can be transmitted on the RS232 auxiliary interface independently from the main interface selection to monitor data.

When One Shot or Phase Mode operating mode is used, the reader can be activated by an External Trigger (for example a pulse from a photoelectric sensor) when the object enters its reading zone.

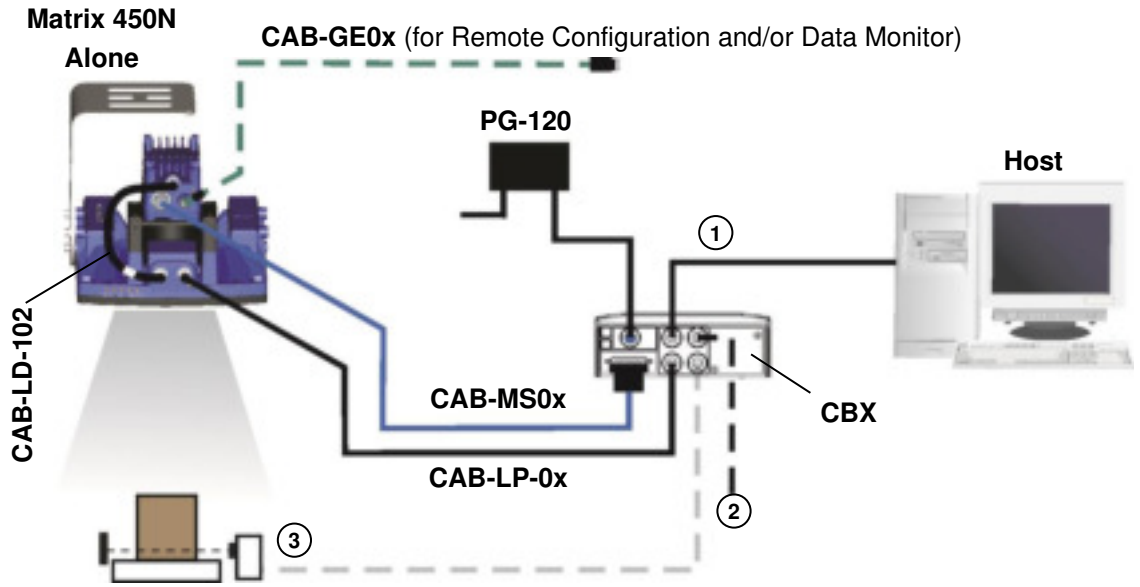

① Main Serial Interface (RS232 or RS422 Full-Duplex)
② Auxiliary Serial Interface (RS232 - Data Monitor) or digital I/O devices
③ External Trigger (for One Shot or Phase Mode)

Figure 55 – Serial Interface Point-to-Point Layout

All devices always support multiple output channels (i.e. for data monitoring).

5.3 FIELDBUS CONNECTION

In this layout a single reader functions as a Slave node on a Fieldbus network. The data is transmitted to the Host through an accessory Fieldbus interface board installed inside the CBX500 connection box.

Reader configuration can be accomplished through the Ethernet interface using the DL.CODE configuration program.

Data can be transmitted on the RS232 auxiliary interface independently from the Fieldbus interface selection to monitor data.

When One Shot or Phase Mode operating mode is used, the reader can be activated by an External Trigger (photoelectric sensor) when the object enters its reading zone.

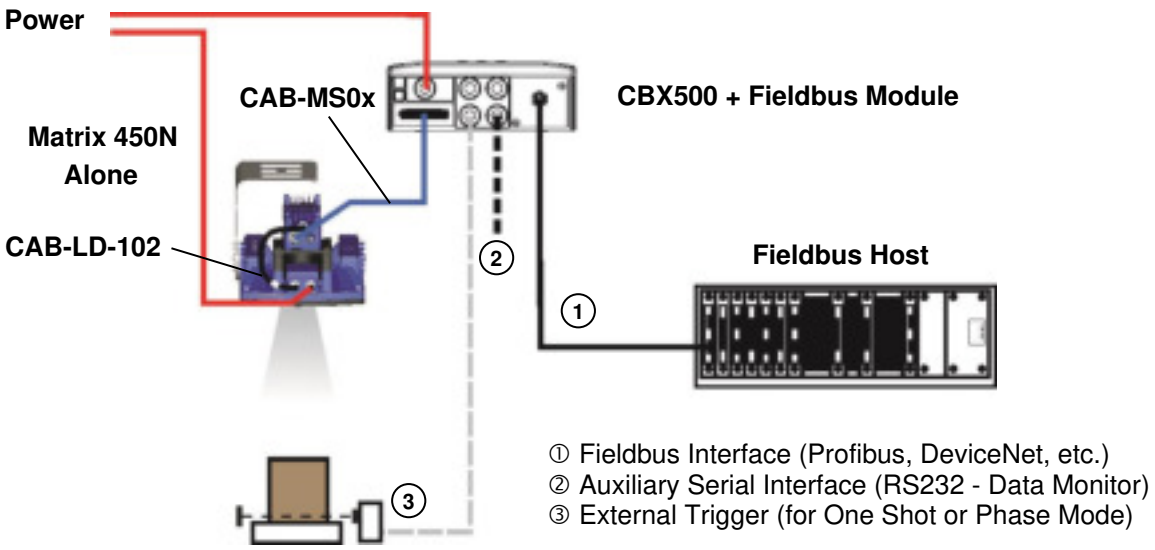

Figure 56 – Fieldbus Interface Point-to-Point Layout

All devices always support multiple output channels (i.e. for data monitoring).

5.4 PASS-THROUGH

The pass-through layout allows each device **working Alone**, to collect data from one or more pass-through input channels and send this data plus its own on one or more different output channels.

In this way independent devices can be connected together in combinations to create multi device networks. Many devices reading independently can send their messages through a common output channel which instead of being directed at a Host can be collected by another device on its pass-through input channel and sent to a Host on a different output channel.

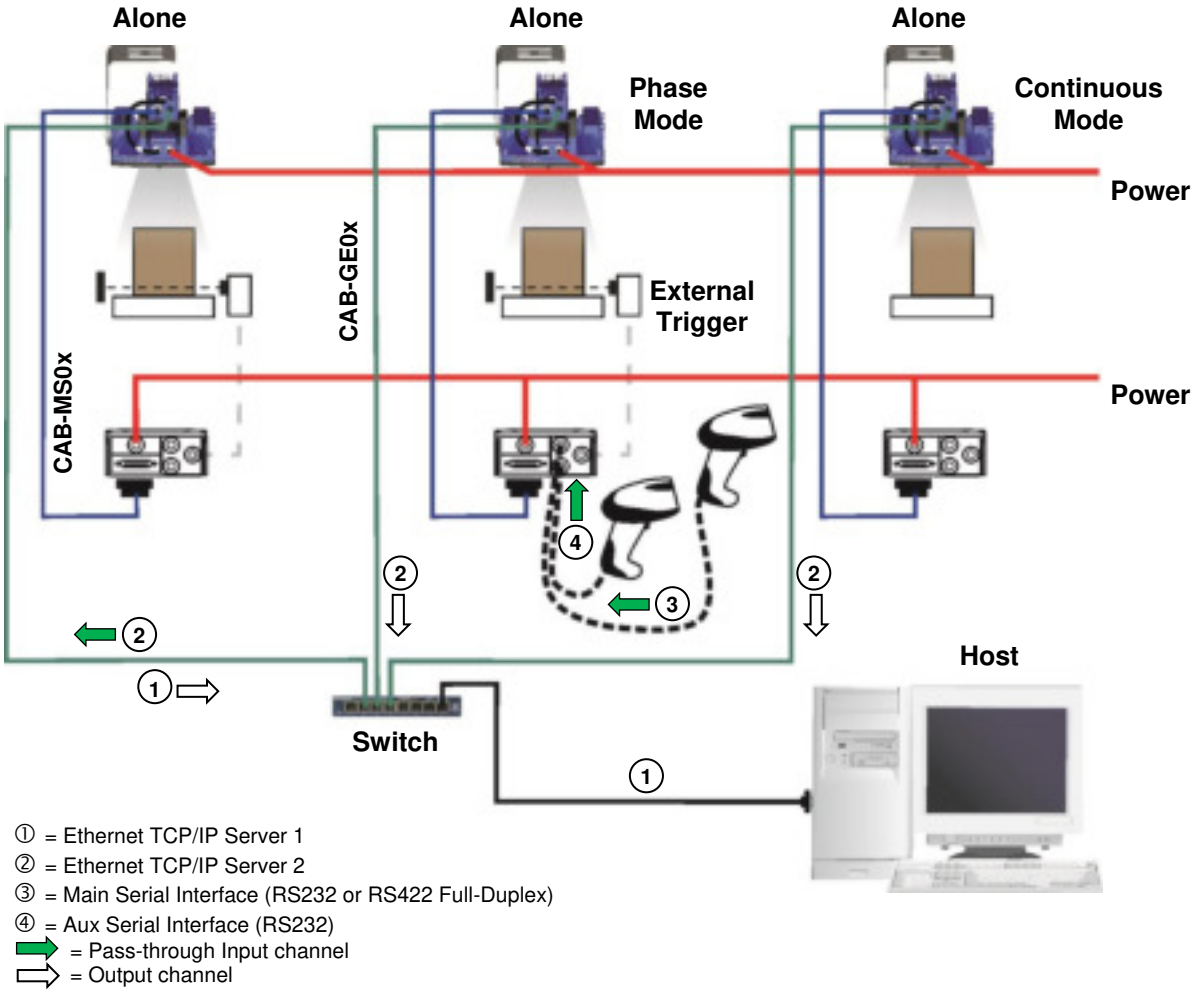

Figure 57 – Pass-through Layout

In a Pass-through layout each device supports multiple pass-through configurations to accept input from different devices on different channels (i.e. middle reader above). However, readers are not required to have a pass-through configuration if they don't need to receive data from an input channel (i.e. right reader above). The overall data collection device always has at least one pass-through configuration to collect the input data from the other devices and send it to the Host (i.e. left reader above).

All devices always support multiple output channels (i.e. for data monitoring).

In a Pass-through layout each device can have a different operating mode: Continuous, One Shot, Phase Mode, etc.

5.5 ID-NET MULTIDATA NETWORK (PASS-THROUGH)

A special case of the pass-through layout allows each Slave device **working Alone**, to collect data from one or more pass-through input channels and send this data plus its own on the ID-NET output channel to the Master.

The Slave readers are connected together using the ID-NET interface. Every Slave reader must have an ID-NET address in the range 1-31.

The Master collects the data from its pass-through ID-NET input channel and sends it to the Host on a different output channel.

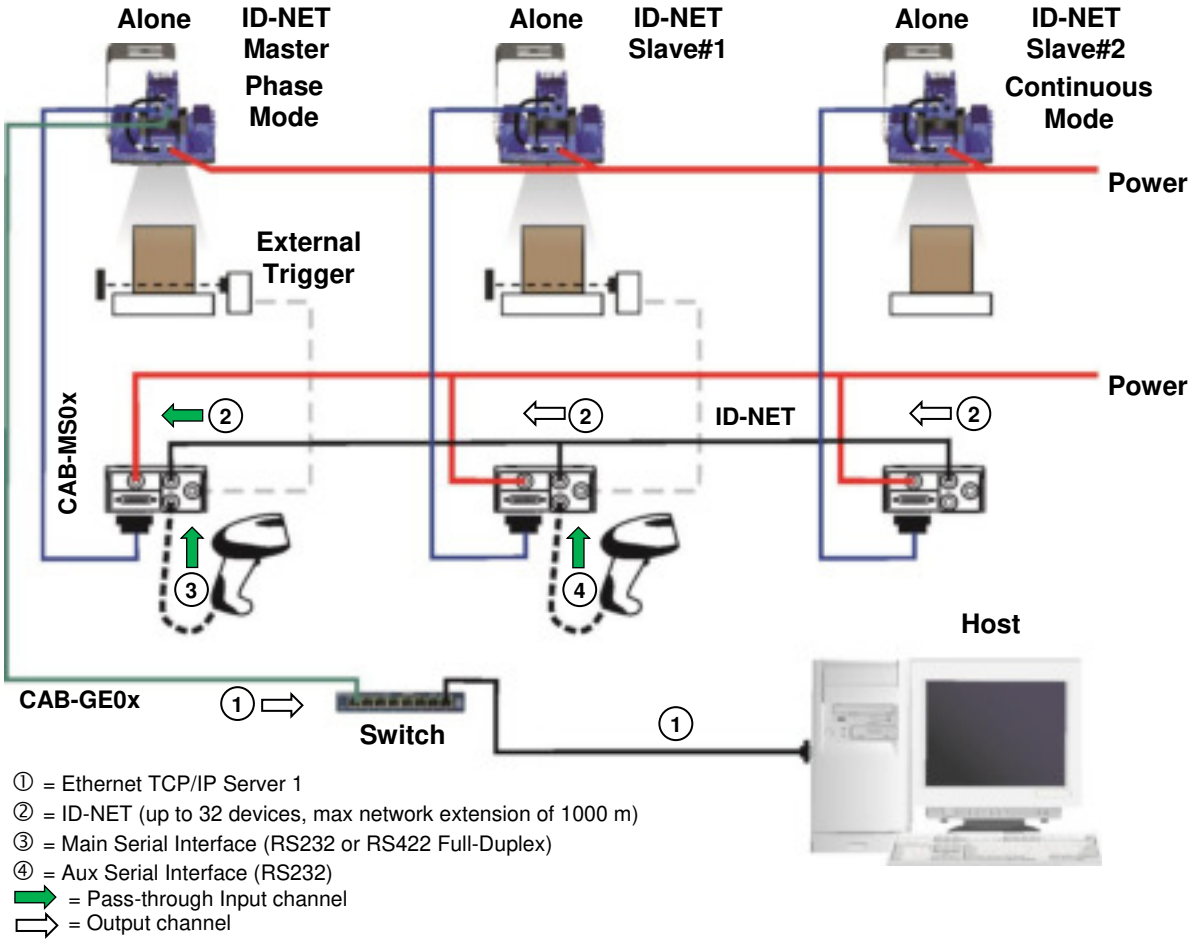

Figure 58 – ID-NET Multidata Layout (Pass-through)

In a Pass-through layout each device supports multiple pass-through configurations to accept input from different devices on different channels (i.e. Master reader above). However, ID-NET Slave readers are not required to have a pass-through configuration if they don't need to receive data from an input channel (i.e. right reader above). The ID-NET Master always has at least one pass-through configuration to collect the ID-NET Slaves data and send it to the Host.

NOTE: Slave devices cannot receive data from a pass-through ID-NET input channel and Master devices cannot send data on an ID-NET output channel.

All devices always support multiple output channels (i.e. for data monitoring).

In a Pass-through layout each device can have a different operating mode: Continuous, One Shot, Phase Mode, etc.

5.6 ID-NET SYNCHRONIZED NETWORK

When the device is **working Synchronized**, the ID-NET connection is used to collect data from several readers to build a multi-point or a multi-sided reading system; there can be one Master and up to 31 Slaves connected together.

The Slave readers are connected together using the ID-NET interface. Every Slave reader must have an ID-NET address in the range 1-31.

The Master reader is also connected to the Host on one of its communication channels. The configuration can be made to a Host using the on-board Ethernet interface to the Master.

In the Master/Slave Synchronized layout the Master operating mode can only be set to PackTrack or Phase Mode. Typically a photocell is used as an External Trigger for the reading Phase.

For a Master/Slave Synchronized layout the External Trigger signal is unique to the system; there is a single reading phase and a single message from the Master reader to the Host computer. **It is not necessary to bring the External Trigger signal to all the readers.** This allows the more economical QL connections to be used for all Slave readers.

The TCP/IP Ethernet and ID-NET interfaces are connected as shown in the figure below.

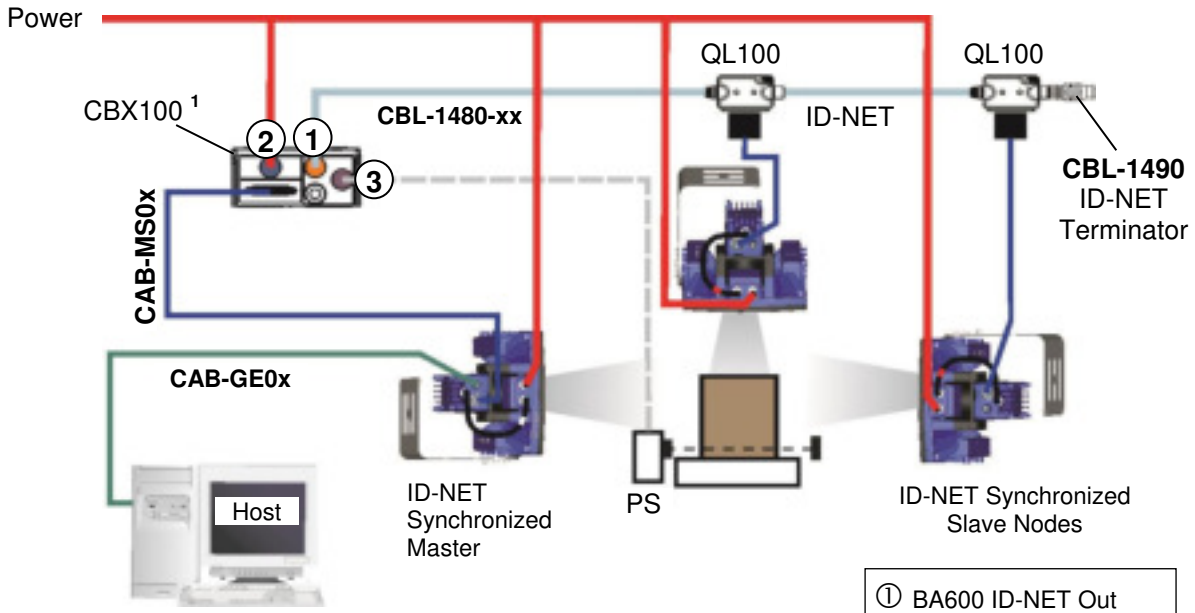

[1] The ID-NET network must be terminated through the internal switch of the CBX100 and inserting an ID-NET terminator into the last QL in the network.

Figure 59 - ID-NET Synchronized Layout with Master on-board TCP/IP Ethernet Interface to Ethernet Host

The Master reader can be connected to the CBX series connection box with the advantage of the Backup and Restore configuration function (CBX + BM100 module).

All devices always support multiple output channels (i.e. for data monitoring).

NOTE: Available TCP/IP compatible on-board Fieldbus communications can be enabled in DL.CODE using this hardware configuration (EtherNet/IP or Modbus).

The Master/Slave Synchronized layout can be connected to a Serial Host using the Master Main Serial interface (RS232 or RS422 Full Duplex).

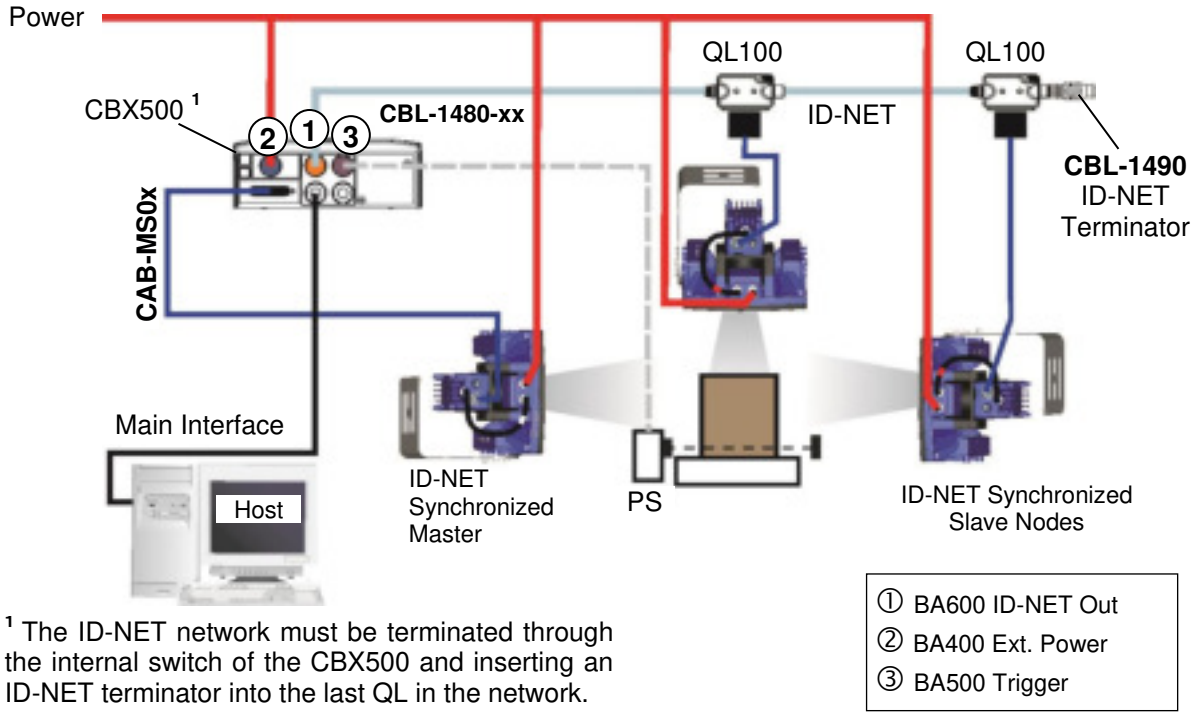

[1] The ID-NET network must be terminated through the internal switch of the CBX500 and inserting an ID-NET terminator into the last QL in the network.

Figure 60 - ID-NET Synchronized Layout with Master Main Serial Interface to Serial Host

If the Backup and Restore function is not required, then a QL300 can be used to connect the master reader.

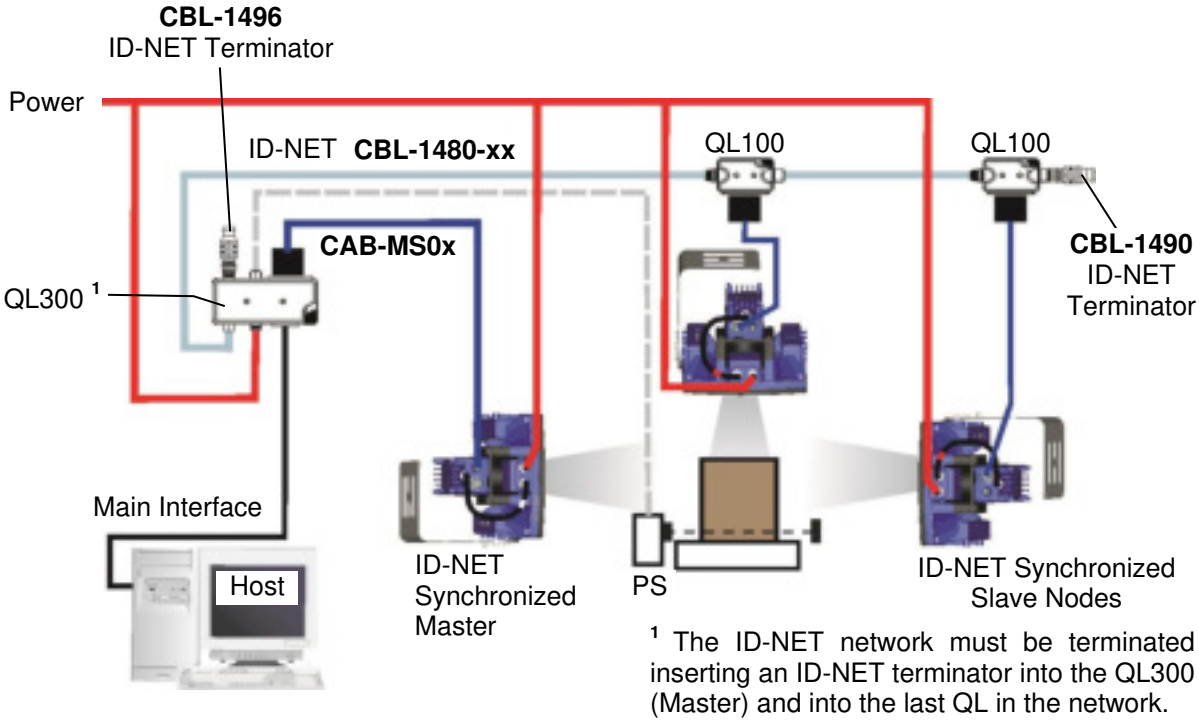

[1] The ID-NET network must be terminated inserting an ID-NET terminator into the QL300 (Master) and into the last QL in the network.

Figure 61 - ID-NET Synchronized Layout with Master Main Serial Interface to Serial Host Matrix 450N Master with QL300 + Matrix 450N Slaves with QL100

Alternatively, the Master reader can communicate to the Host as a Slave node on a non TCP/IP compatible Fieldbus network (DeviceNet, Profibus, etc.). This requires using an accessory HMS Fieldbus interface board installed inside the CBX500 connection box.

System configuration can be accomplished through the Ethernet interface of each individual reader using the DL.CODE configuration program.

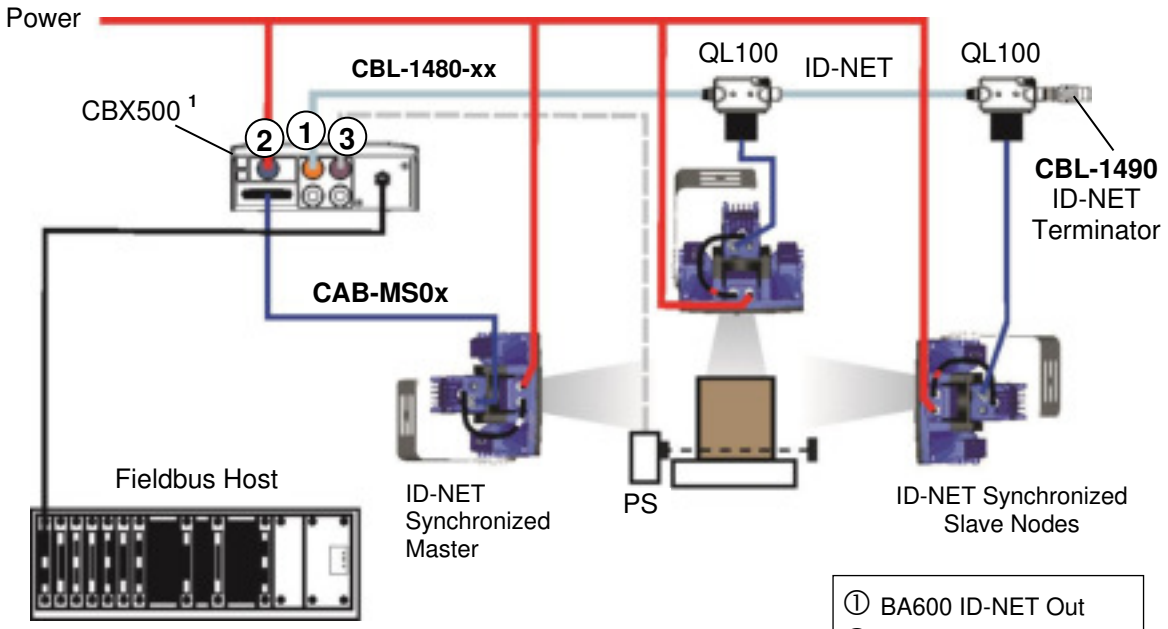

[1] The ID-NET network must be terminated through the internal switch of the CBX500 and inserting an ID-NET terminator into the last QL in the network.

Figure 62 – ID-NET Synchronized Layout with Master CBX500 Fieldbus Interface to Fieldbus Host

6 READING FEATURES

6.1 FOV CALCULATION

Use the data in the following table to calculate the FOV for your application, referring to Figure 63 and the formula below.

Model	Lens	Viewing Angle **Horizontal**	Viewing Angle **Vertical**	Viewing Angle **Diagonal**	**Min Focus Distance**[3] **d** (mm)
Matrix 450 800-030	LNS-1216 16 mm	28.8°	24.5°	37.2°	**40**
	LNS-1225 25 mm	19.8°	16.7°	25.7	**50**
	LNS-1235 35 mm	13.4°	11.3°	17.5°	**150**
	LNS-1250 50 mm	9.2°	7.8°	12.1°	**340**

The viewing angle has a tolerance of ± 1° depending on the focus distance.

$$FOV_x = 2\left[(d + 44\text{ mm})\tan(\alpha_x/2)\right]$$

where:

FOV_x = horizontal, vertical or diagonal FOV

α_x = horizontal, vertical or diagonal viewing angles.

d = focus distance (from Lens Cover window surface to code surface)

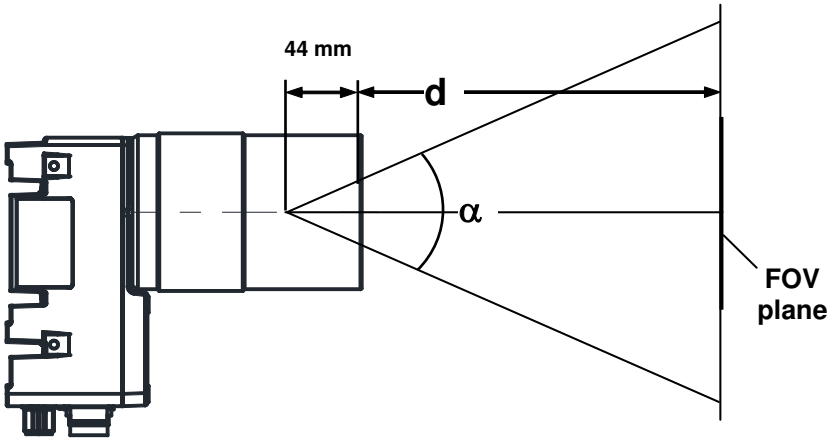

Figure 63 – Reading Distance References

Example:

The FOV for a **Matrix 450N 800-030 base** using the **16 mm lens** at a **focus distance of 1000 mm** is:

$FOV_H = 2\ [(1000\text{ mm} + 44\text{ mm})\tan(28.8°/2)] =$ **536 mm**
$FOV_V = 2\ [(1000\text{ mm} + 44\text{ mm})\tan(24.5°/2)] =$ **453 mm**

[3] The minimum focus distance is used for applications that do not use the LT-03x lighting system.

6.2 READING DIAGRAMS

- The following reading diagrams are to be considered as references and are given for typical performance at 25°C using high quality grade A symbols: Code 128 (1D code) and Data Matrix ECC 200 (2D code) from the Test Charts provided with the reader.

- Testing should be performed with the actual Matrix 450N + LT-03x assembly using application codes in order to evaluate whether maximizing application performance requires adjustments to the HW/SW configuration with respect to the Reference Conditions given under each diagram.

- The ratio of the Vertical FOV width with respect to the Horizontal FOV width in the diagrams is about equal to 0.84; specifically 2050/2448. (i.e. $FOV_{V.} \cong FOV_H$ x 0.84).

- The focus distance and reading distance ranges are measured from the Lens Cover window surface.

- When using a 25 mm focal length lens (LNS-1225), it is possible to use Super Narrow Angle Lighting Systems (LT-030 or LT-031) as well as the Narrow Angle Lighting System LT-032. It is suggested to use the LT-032 in applications with very low contrast codes and in all cases where the higher lighting power of the LT-030 isn't necessary. LT-030 and LT-031 Lighting Systems are especially effective in high speed code movement applications.

- When defining a HW/SW configuration for the Matrix 450N + LT-03x assembly for conditions different from those of the reference diagrams, it is suggested to keep in mind the following rules:

    - ♦ Changes in the diaphragm aperture influence the depth of field (reading distance range) and the luminosity of the image. Increasing the the diaphragm aperture by one stop (i.e. from F/8 to F/5.6 or from F/11 to F/8) doubles the luminosity of the image, but can cause significant reduction in the reading distance range.

    - ♦ Changes in *Exposure Time* act directly proportional to the luminosity of the image and inversely proportional to the maximum code reading movement speed. Consequently, reducing the *Exposure Time* by half, reduces the luminosity of the image by half but doubles the theoretical code reading movement speed.

    - ♦ Changes in *Gain* act directly proportional to the luminosity of the image. Increasing the *Gain* value however, can reduce the quality of the acquired image.

    - ♦ The LT-030 lighting power (at the center of the field of view) is about equal to twice that of the LT-031 and 3.5 times that of the LT-032.

    For example, for the purpose of only changing the luminosity of the image, the following three adjustments are equivalent:

    increase the the diaphragm aperture by one stop;

    double the *Exposure Time*;

    double the *Gain*.

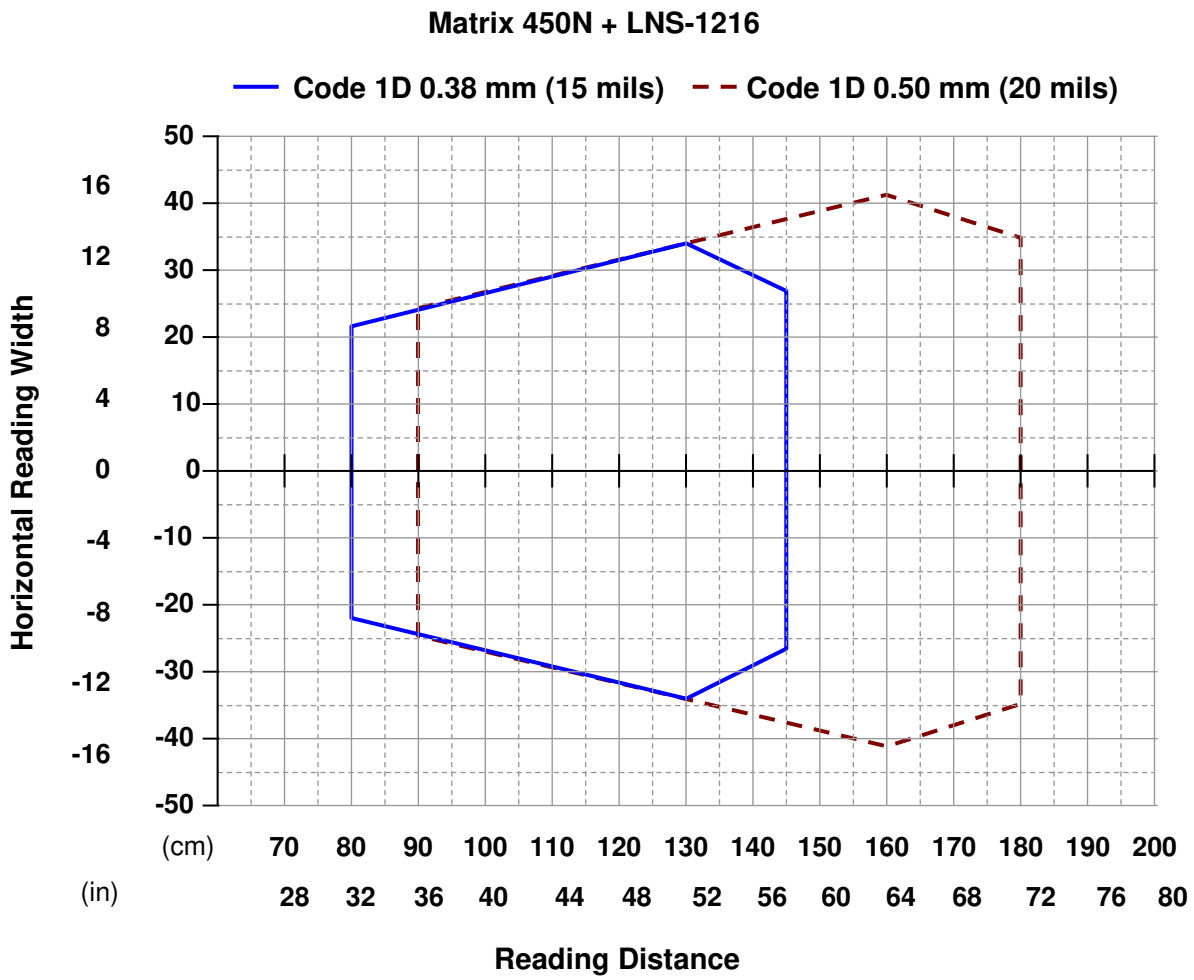

CONDITIONS:

Hardware Settings		
Code Symbology	Code 128	
Code Resolution	0.38 mm (15 mils)	0.50 mm (20 mils)
Focal Length	16 mm	
Aperture Stop	F/8	
Focus Distance	1.200 mm (47.2 inches)	1.400 mm (55.1 inches)
PPI	94	84
Tilt Angle	45°	
Skew Angle	15°	
Lighting System	**LT-032**	**LT-032**
Software Parameters		
Exposure Time (µs)	190	250
Max code moving speed	1.8 m/s	1.8 m/s
Gain	13	14
Internal Lighting	Very High Power Strobed or Continuous High Power	
Processing Mode	Advanced	
Minimum Code Height (mm)	5	
Narrow Quiet Zone	Enabled	

Matrix 450N + LNS-1225

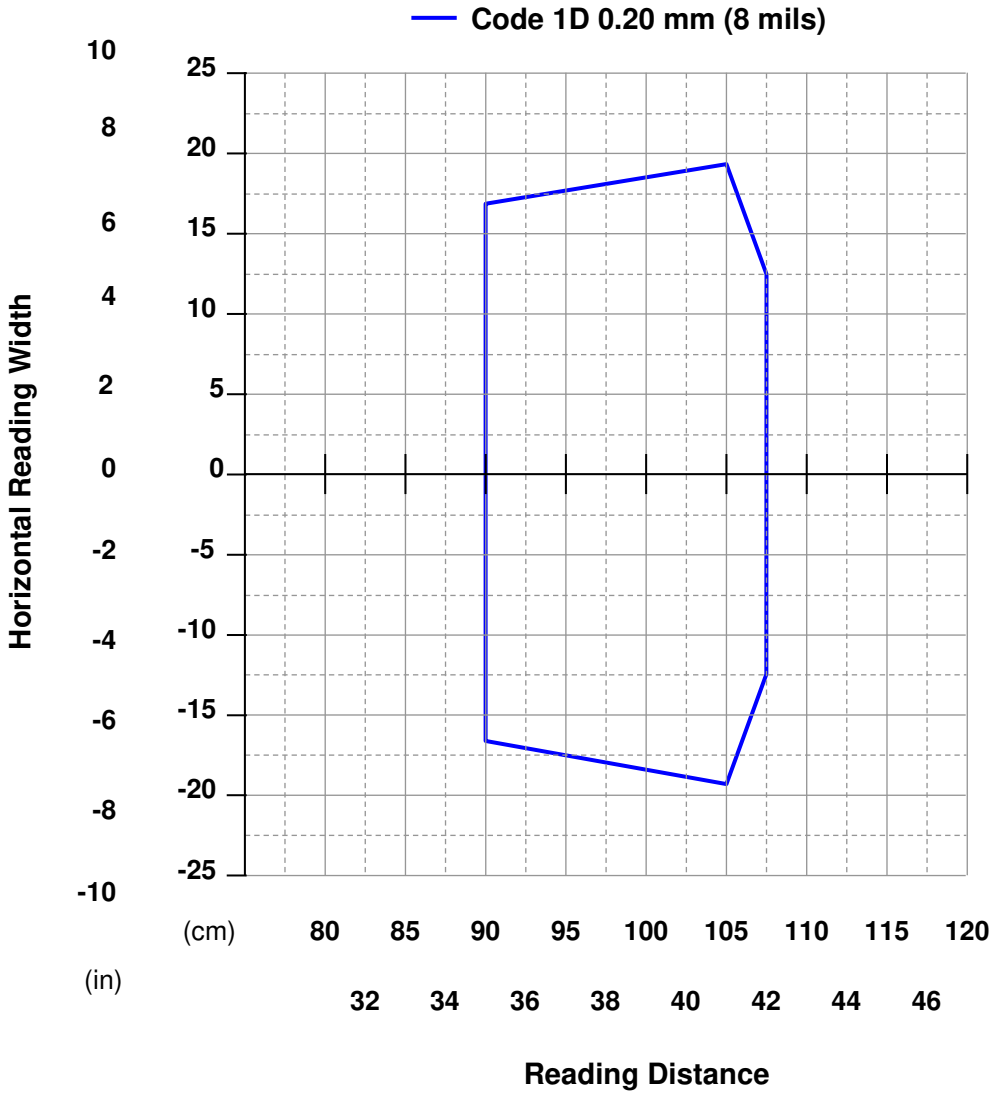

CONDITIONS:

Hardware Settings			
Code Symbology	Code 128		
Code Resolution	0.20 mm (8 mils)		
Focal Length	25 mm		
Aperture Stop	F/5.6		
Focus Distance	1.000 mm (39.4 inches)		
PPI	170		
Tilt Angle	45°		
Skew Angle	15°		
Lighting System	**LT-030**	**LT-031**	**LT-032**
Software Parameters			
Exposure Time (µs)	60	120	120
Max code moving speed	3.0 m/s	1.5 m/s	1.5 m/s
Gain	10	10	17
Internal Lighting	Very High Power Strobed or Continuous High Power		
Processing Mode	Advanced		
Minimum Code Height (mm)	5		
Narrow Quiet Zone	Enabled		

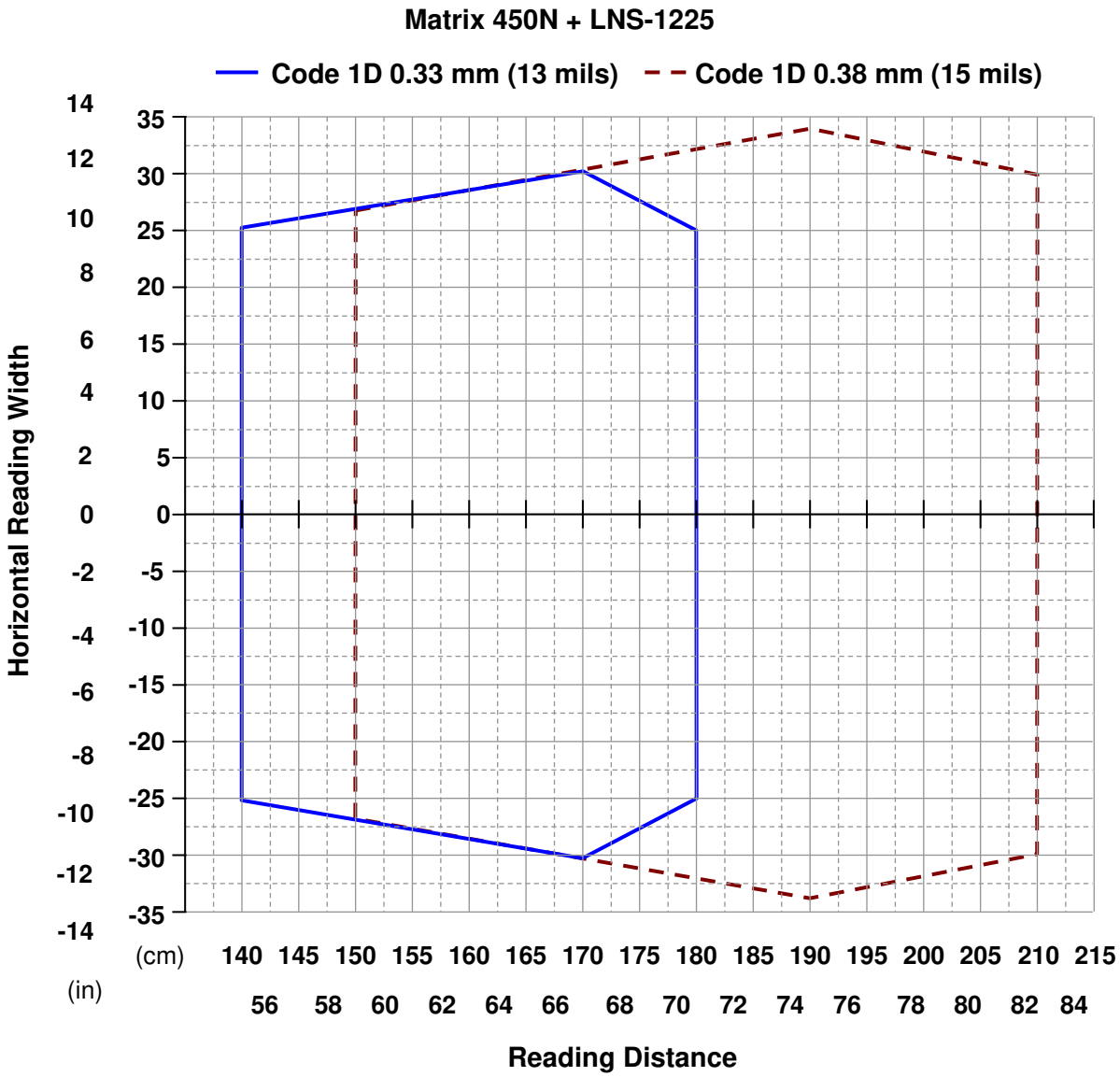

CONDITIONS:

Hardware Settings						
Code Symbology	Code 128					
Code Resolution	0.33 mm (13 mils)			0.38 mm (15 mils)		
Focal Length	25 mm					
Aperture Stop	F/5.6					
Focus Distance	1.700 mm (66.9 inches)			1.900 mm (74.8 inches)		
PPI	100			90		
Tilt Angle	45°					
Skew Angle	15°					
Lighting System	**LT-030**	**LT-031**	**LT-032**	**LT-030**	**LT-031**	**LT-032**
Software Parameters						
Exposure Time (µs)	150	160	200	120	120	190
Max code moving speed	1.8 m/s	1.8 m/s	1.5 m/s	2.8 m/s	2.8 m/s	1.8 m/s
Gain	7	13	16	8	16	15
Internal Lighting	Very High Power Strobed or Continuous High Power					
Processing Mode	Advanced					
Minimum Code Height (mm)	5					
Narrow Quiet Zone	Enabled					

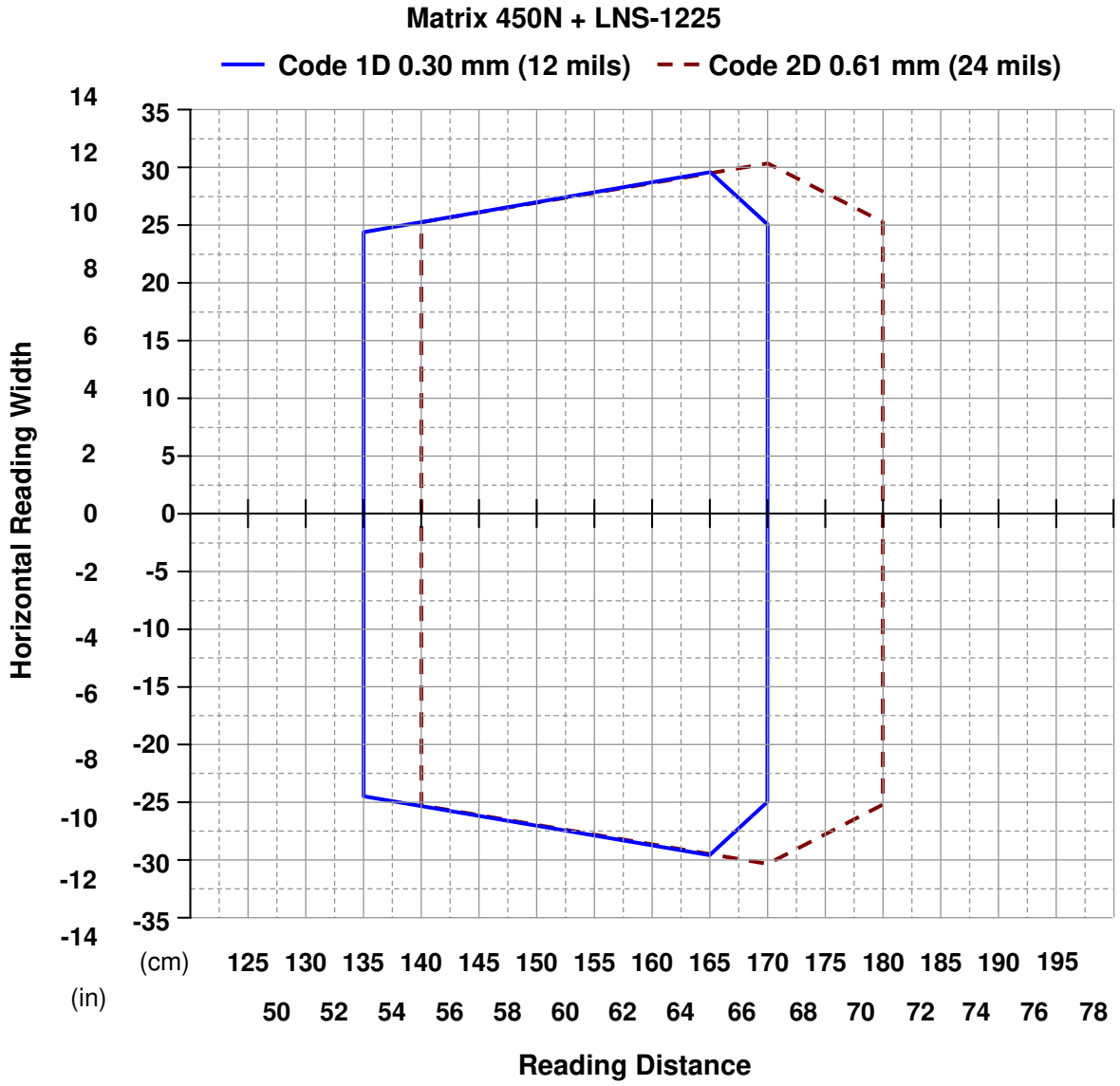

CONDITIONS:

Hardware Settings						
Code Symbology	Code 128			Data Matrix ECC 200		
Code Resolution	0.30 mm (12 mils)			0.61 mm (24 mils)		
Focal Length	25 mm					
Aperture Stop	F/5.6					
Focus Distance	1.600 mm (63.0 inches)			1.700 mm (66.9 inches)		
PPI	106			100		
Tilt Angle	45°					
Skew Angle	15°					
Lighting System	**LT-030**	**LT-031**	**LT-032**	**LT-030**	**LT-031**	**LT-032**
Software Parameters						
Exposure Time (µs)	120	120	180	160	160	220
Max code moving speed	2.3 m/s	2.3 m/s	1.5 m/s	3.2 m/s	3.2 m/s	2.5 m/s
Gain	7	14	16	6	12	16
Internal Lighting	Very High Power Strobed or Continuous High Power					
Processing Mode	Advanced			Standard		
Minimum Code Height (mm)	5					
Narrow Quiet Zone	Enabled					
Code Contrast / Decoding Complexity				Low / Medium		

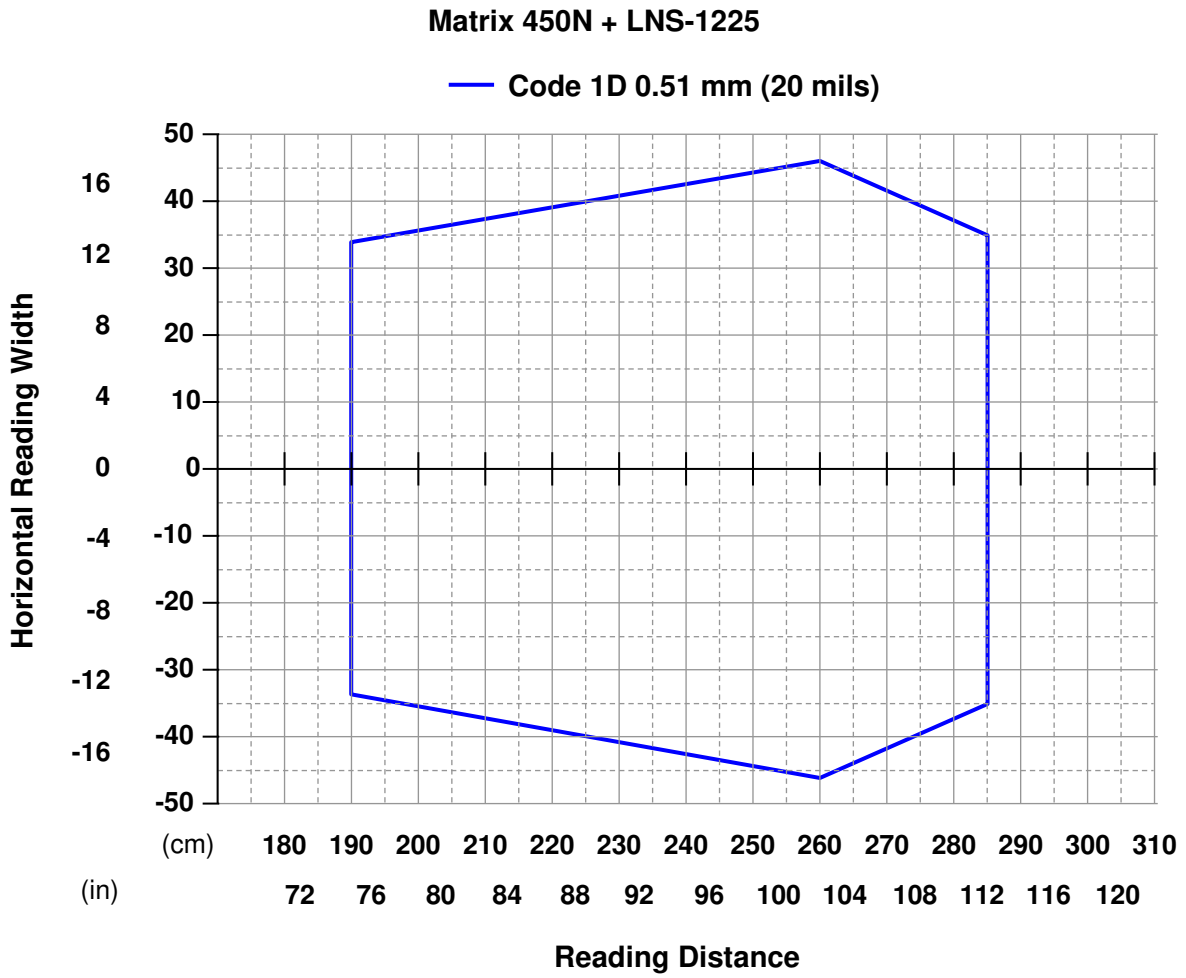

CONDITIONS:

Hardware Settings			
Code Symbology	Code 128		
Code Resolution	0.51 mm (20 mils)		
Focal Length	25 mm		
Aperture Stop	F/5.6		
Focus Distance	2.500 mm (98.4 inches)		
PPI	70		
Tilt Angle	45°		
Skew Angle	15°		
Lighting System	**LT-030**	**LT-031**	**LT-032**
Software Parameters			
Exposure Time (µs)	250	250	380
Max code moving speed	1.8 m/s	1.8 m/s	1.2 m/s
Gain	8	16	19
Internal Lighting	Very High Power Strobed or Continuous High Power		
Processing Mode	Advanced		
Minimum Code Height (mm)	5		
Narrow Quiet Zone	Enabled		

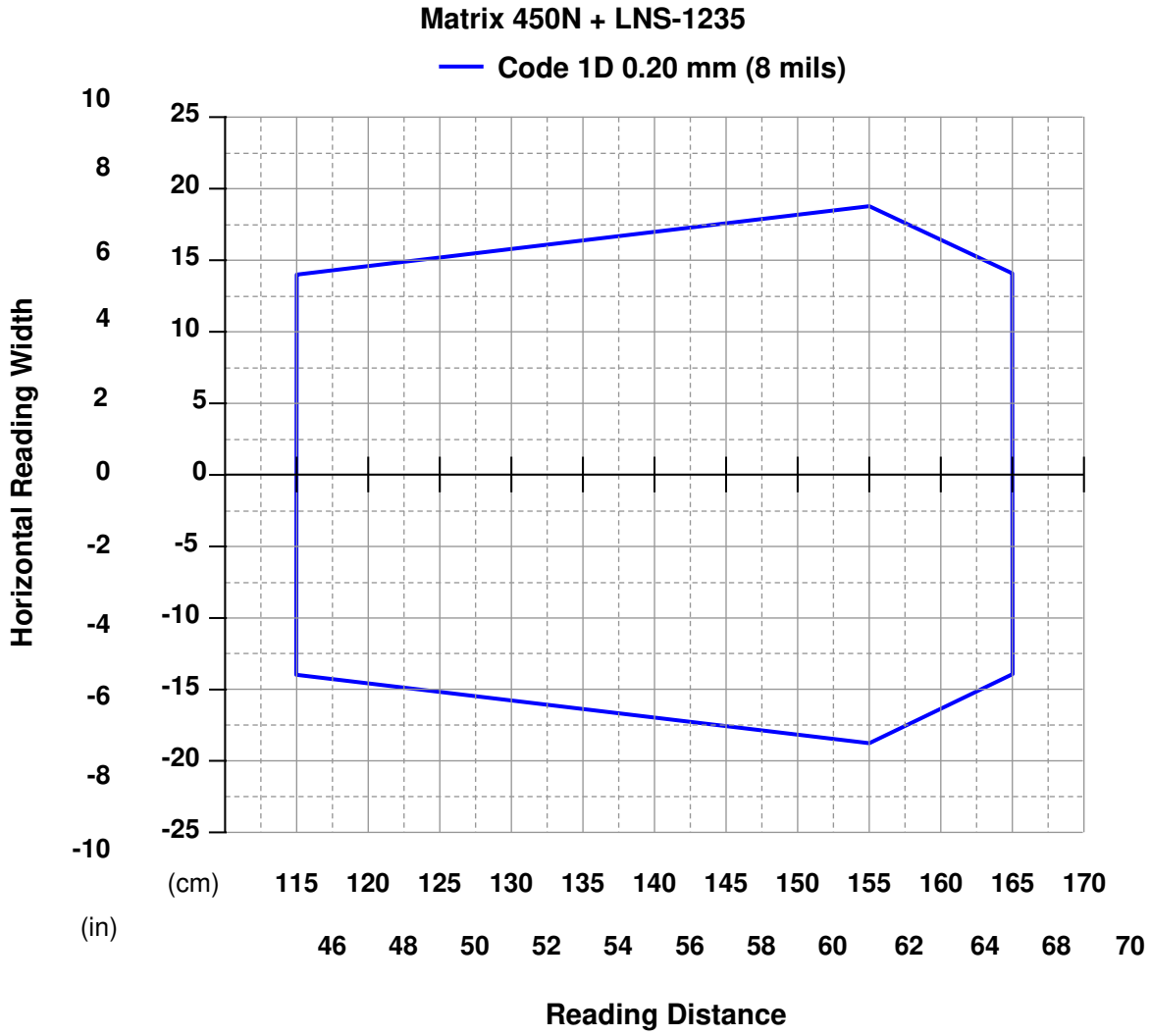

CONDITIONS:

Hardware Settings		
Code Symbology	Code 128	
Code Resolution	0.20 mm (8 mils)	
Focal Length	35 mm	
Aperture Stop	F/11	
Focus Distance	1.450 mm (57.1 inches)	
PPI	175	
Tilt Angle	45°	
Skew Angle	15°	
Lighting System	**LT-030**	**LT-031**
Software Parameters		
Exposure Time (µs)	150	300
Max code moving speed	1.2 m/s	0.6 m/s
Gain	16	16
Internal Lighting	Very High Power Strobed or Continuous High Power	
Processing Mode	Advanced	
Minimum Code Height (mm)	5	
Narrow Quiet Zone	Enabled	

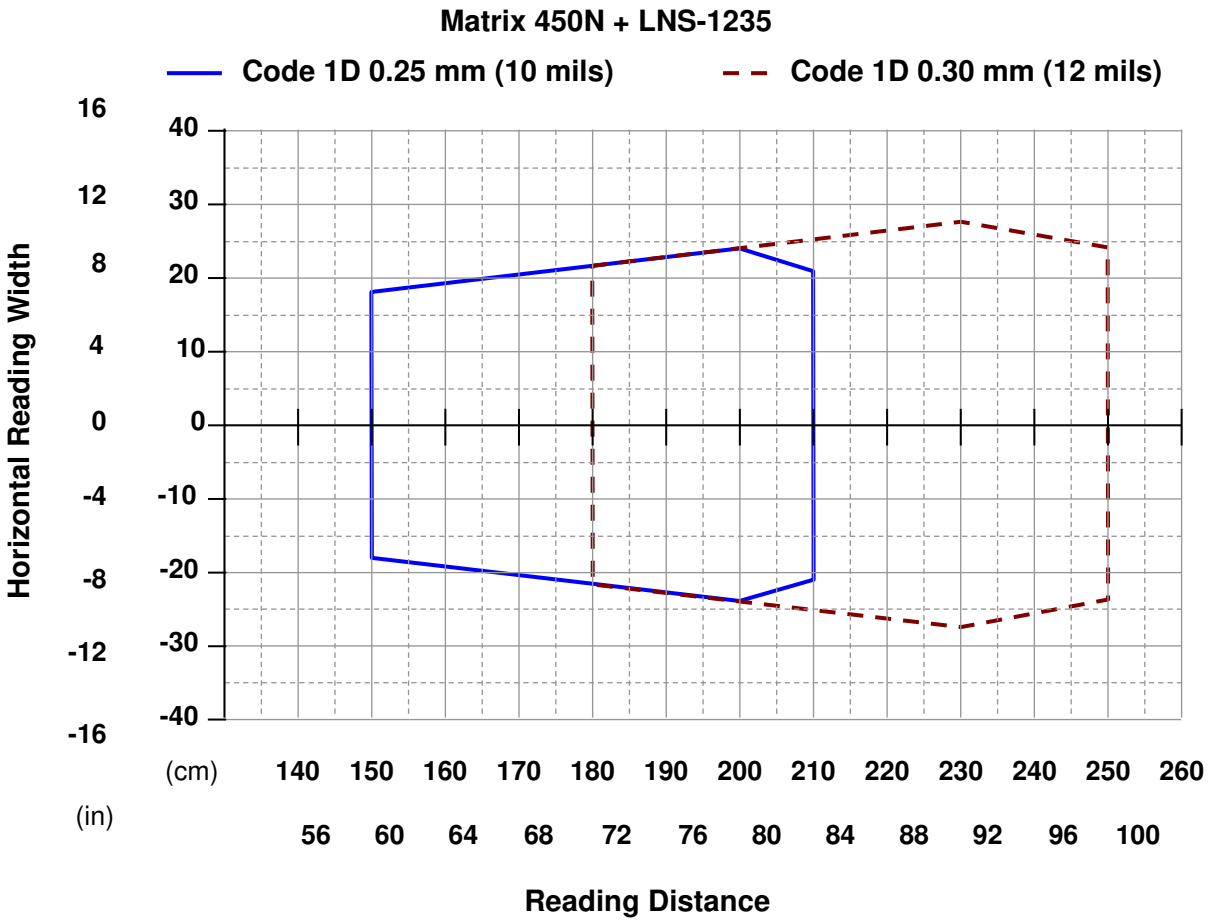

CONDITIONS:

Hardware Settings				
Code Symbology	Code 128			
Code Resolution	0.25 mm (10 mils)		0.30 mm (12 mils)	
Focal Length	35 mm			
Aperture Stop	F/11		F/8	
Focus Distance	1.800 mm (70.9 inches)		2.300 mm (90.5 inches)	
PPI	140		110	
Tilt Angle	45°			
Skew Angle	15°			
Lighting System	**LT-030**	**LT-031**	**LT-030**	**LT-031**
Software Parameters				
Exposure Time (µs)	200	400	150	270
Max code moving speed	1.0 m/s	0.5 m/s	1.8 m/s	1.0 m/s
Gain	22	22	18	22
Internal Lighting	Very High Power Strobed or Continuous High Power			
Processing Mode	Advanced			
Minimum Code Height (mm)	5			
Narrow Quiet Zone	Enabled			

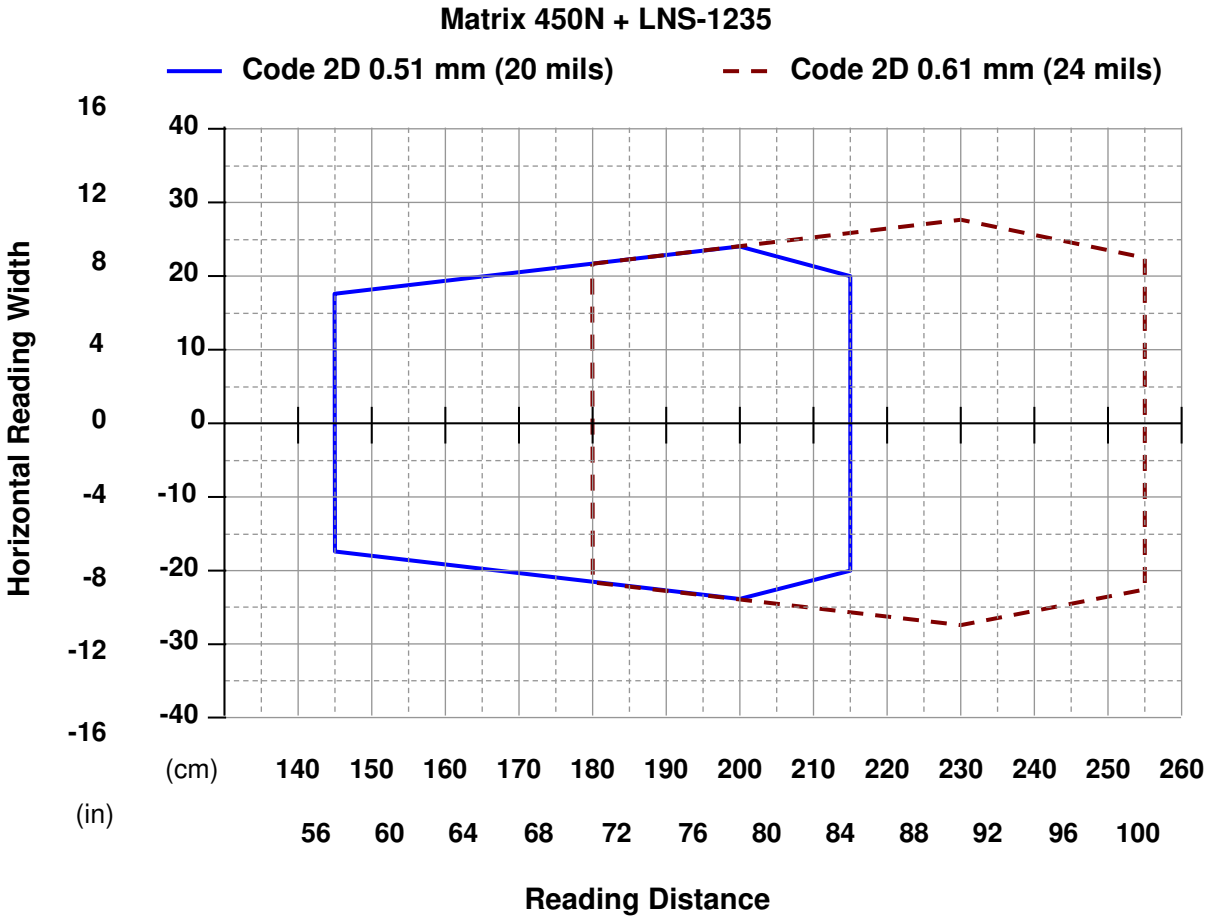

CONDITIONS:

Hardware Settings				
Code Symbology	Data Matrix ECC 200			
Code Resolution	0.51 mm (20 mils)		0.61 mm (24 mils)	
Focal Length	35 mm			
Aperture Stop	F/11		F/8	
Focus Distance	1.900 mm (74.8 inches)		2.300 mm (90.5 inches)	
PPI	135		110	
Tilt Angle	45°			
Skew Angle	15°			
Lighting System	**LT-030**	**LT-031**	**LT-030**	**LT-031**
Software Parameters				
Exposure Time (µs)	230	400	150	270
Max code moving speed	2.0 m/s	1.0 m/s	3.0 m/s	1.7 m/s
Gain	20	23	18	22
Internal Lighting	Very High Power Strobed or Continuous High Power			
Processing Mode	Standard			
Code Contrast	Low			
Decoding Complexity	Medium			

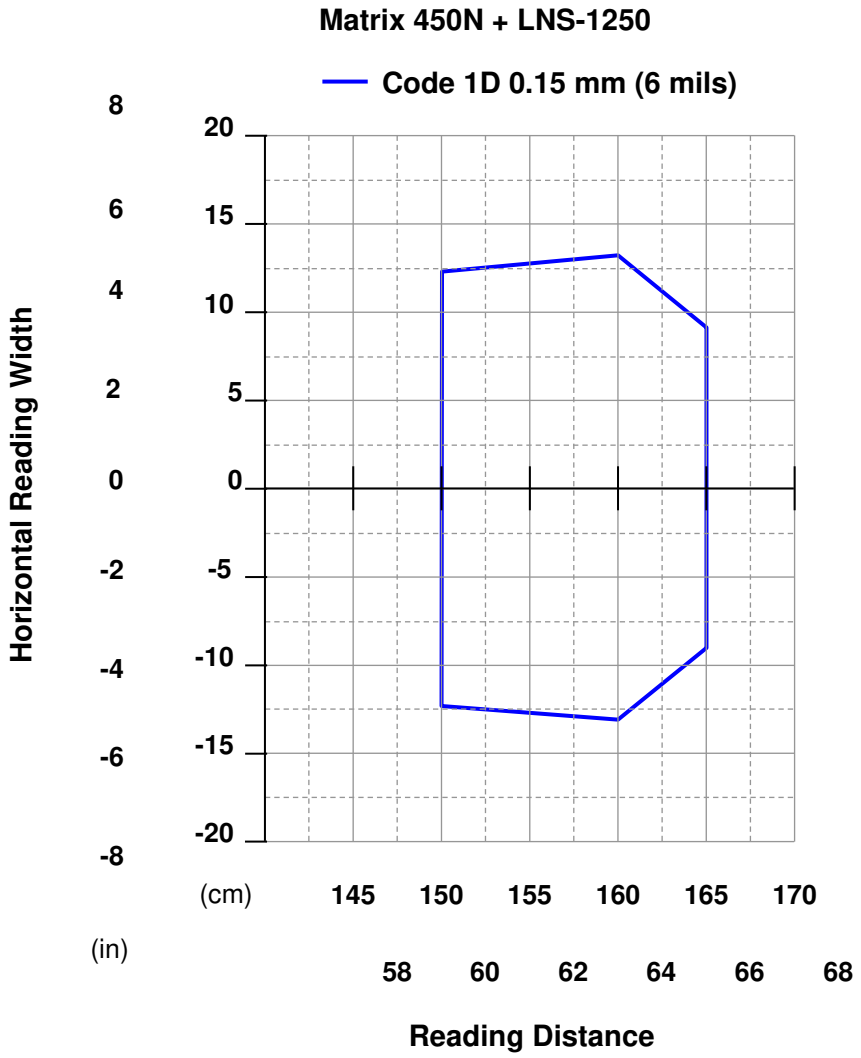

CONDITIONS:

Hardware Settings		
Code Symbology	Code 128	
Code Resolution	0.15 mm (6 mils)	
Focal Length	50 mm	
Aperture Stop	F/8	
Focus Distance	1.600 mm (57.1 inches)	
PPI	175	
Tilt Angle	45°	
Skew Angle	15°	
Lighting System	**LT-030**	**LT-031**
Software Parameters		
Exposure Time (µs)	70	130
Max code moving speed	1.8 m/s	1.0 m/s
Gain	16	18
Internal Lighting	Very High Power Strobed or Continuous High Power	
Processing Mode	Advanced	
Minimum Code Height (mm)	5	
Narrow Quiet Zone	Enabled	

6.3 MAXIMUM LINE SPEED AND EXPOSURE TIME CALCULATIONS

The ***Exposure Time*** (or **Shutter**) parameter defines the time during which the image will be exposed to the reader sensor to be acquired. This parameter depends heavily on the environmental conditions (external lighting system, image contrast etc.).

In general, a longer time corresponds to a lighter image but is susceptible to blurring due to the code movement; a shorter exposure time corresponds to a darker image.

NOTE: The following considerations must be applied only when the LT-03x lighting system and **2D codes** are used. The Maximum line speed allowed for linear codes or postal code reading applications heavily depends on the direction of symbol movement. When the direction of movement is parallel to the elements of the code, the maximum speed is greater.

Assuming:

- **X**: Code Resolution (mm)
- $\mathbf{T_{exp}}$: Exposure Time (s)
- **LS**: Line Speed (mm/s)

The essential condition to avoid blurring effects between two adjacent elements in a dynamic reading application is:

$$\mathbf{LS * T_{exp} \leq X}$$

The maximum (theoretical) line speed **LS** can be calculated as follows:

$$\mathbf{X / T_{exp\ (max)} = LS_{\ (max)}}$$

Example:

A Matrix 450N using:

LT-03x Lighting Mode = Very High Power Strobe
Exposure Time (μs) = 100
Code Resolution (X) = 0.254 mm (10 mils)

has a maximum line speed of:

0.254 (mm) / 0.0001 (s) = 2540 mm/s

Likewise, $\mathbf{T_{exp\ (max)}}$ is the maximum ***Exposure Time*** value that can be used without blurring for the given application line speed and code resolution. Therefore:

$$\mathbf{X / LS_{\ (max)} = T_{exp\ (max)}}$$

$T_{exp\ (max)}$ and **$LS_{(max)}$** are represented in the graph below as the curved line for **X** (code resolution). Values above the curve result in blurring. In practice, the application values are somewhere below the theoretical line, (in the green area), due to environmental and other conditions.

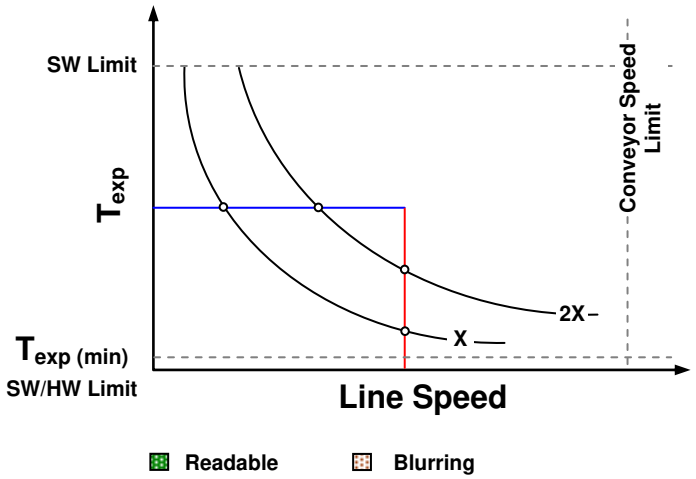

For example, the maximum target speed in the application is also affected by these conditions:

- **Code/Background Contrast**: maximum speed decreases when decreasing image contrast (poor quality codes, reflective transparent coverings, different supports and printing techniques).
- **Code Resolution**: maximum speed increases when decreasing code resolution, (i.e. **2X)**. There is a decrement of overlapping effects between two adjacent elements.
- **Tilt Angle**: maximum speed decreases when increasing Tilt angle (from 0 to 45 degrees).

$T_{exp\ (min)}$ is the minimum ***Exposure Time*** value obtainable for the specific application. It can be evaluated in static reading conditions and depends on the Matrix reader hardware selected for the application (LT-03x lighting system model, optical lens, diaphragm aperture, reading distance) and on any external lighting system. It may also depend on code printing quality, and reader position.

The ***Internal Lighting*** parameter allows setting the operating mode of the LT-03x lighting system. The possible values are:

- *Disabled*: the LT-03x LED array is turned off all the time. This option can be useful if using an external lighting system;
- *Continuous High-Power*: the LT-03x LED array is turned on continuously at the **highest** power level. This option is useful if the LED array blinking (Strobed operating mode) disturbs the operator.
- *Very-High/High-Power Strobed*: the LT-03x LED array is on only during the image exposure time. Two different lighting levels can be set.

NOTE: To avoid LED array overheating, for settings other than disabled, the program automatically limits the range of allowed values for the **Exposure Time** parameter. Therefore, after changes to *Internal Lighting*, recheck **Exposure Time**.

7 SOFTWARE CONFIGURATION

Software configuration of your Matrix 450N for static reading or simple code reading applications can be accomplished by the Rapid Configuration procedure using the X-PRESS HMI (which requires no external configuration program). This procedure is described in chapter 1 Steps 4-6.

For the majority of applications however you will use DL.CODE, connecting to the reader through the on-board Ethernet interface. See chapter 1 Steps 7-8.

7.1 DL.CODE SYSTEM REQUIREMENTS

To install and run DL.CODE you should have a Laptop or PC that meets or exceeds the following:

- 2.00 GHz or faster microprocessor
- Windows: XP, 7, 8, or 10
- 1 GB RAM
- 2 GB hard disk for 64-bit machines; 1 GB hard disk for 32-bit machines
- 100 Base-T Ethernet
- One 19" or larger monitor (optimized for 1280x1024 resolution)

7.2 READER CONFIGURATION

For an example of Matrix device configuration see the example in chapter 1 Steps 7-8.

NOTE: Especially for lengthy configurations, it is always good practice to periodically save the configuration to permanent memory (**Save on Device**) to avoid losing the configuration in Temporary Memory. You must give a name to the new configuration or overwrite an existing one (except for Default which cannot be modified).

When all the configuration parameters are set correctly and saved to the device, you can perform a Backup to File and/or to an External storage device (BM100, etc.). See par. 7.5.

NOTE: An improvement in the Matrix N Family readers allows them to contain several configurations or jobs in permanent memory.

This means that in addition to your application configuration(s), the Default configuration is always present on the reader and in fact it is not modifiable and cannot be deleted.

7.2.1 Auto Calibration

DL.CODE provides the **Image Auto-Setup** tool to maximize the reading performance by tuning the acquisition parameters (photometry) automatically. By selecting the **Image Auto-Setup** tool from the Image Setup step, the following window appears:

Figure 64 – Image Auto-Setup

Select the Static or Dynamic Self-Tuning option; Start Autolearn and Apply to the Image Setup. The Image Setup window works interactively so that you can see the results of the parameter setting changes as well as the decoding results (Results panel). When switching to the Code Setup step you can also see the decoding results displayed on the image.

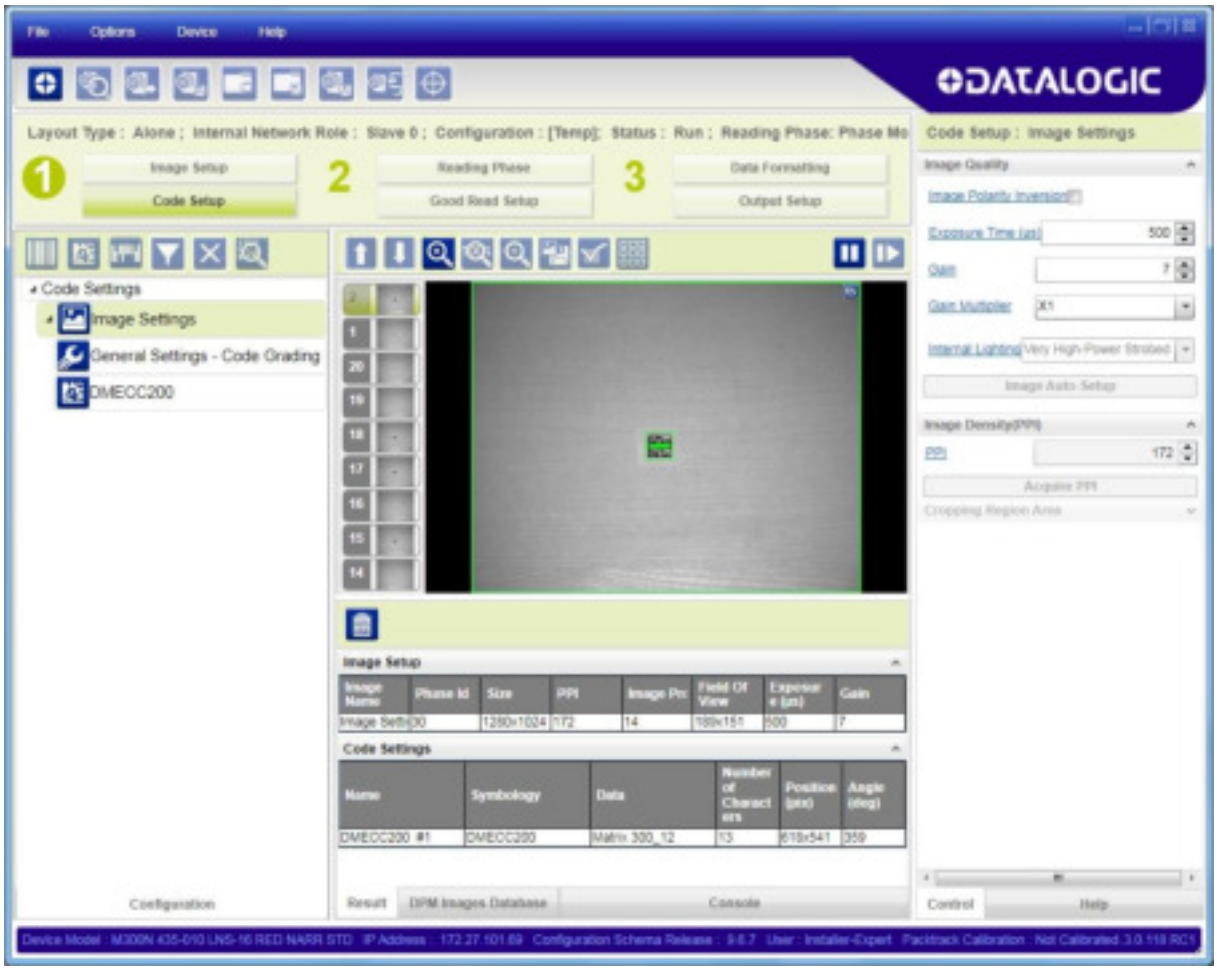

Figure 65 – Decoding Results OK

7.2.2 Manual Calibration

The following examples show some of the typical conditions occurring during the installation and how they can be tuned manually:

Under-exposure:

To correct this result it is recommended to change the following parameters in their order of appearance:

1. increase the **Exposure Time**
2. increase the **Gain**

NOTE: In general, a longer exposure time corresponds to a lighter image but is susceptible to blurring due to code movement. Exposure time is also limited by the Internal Lighting mode parameter. **Longer exposure times can be set if the power strobe level is lowered.**

High gain settings may produce a grainy image that may affect the decoding process.

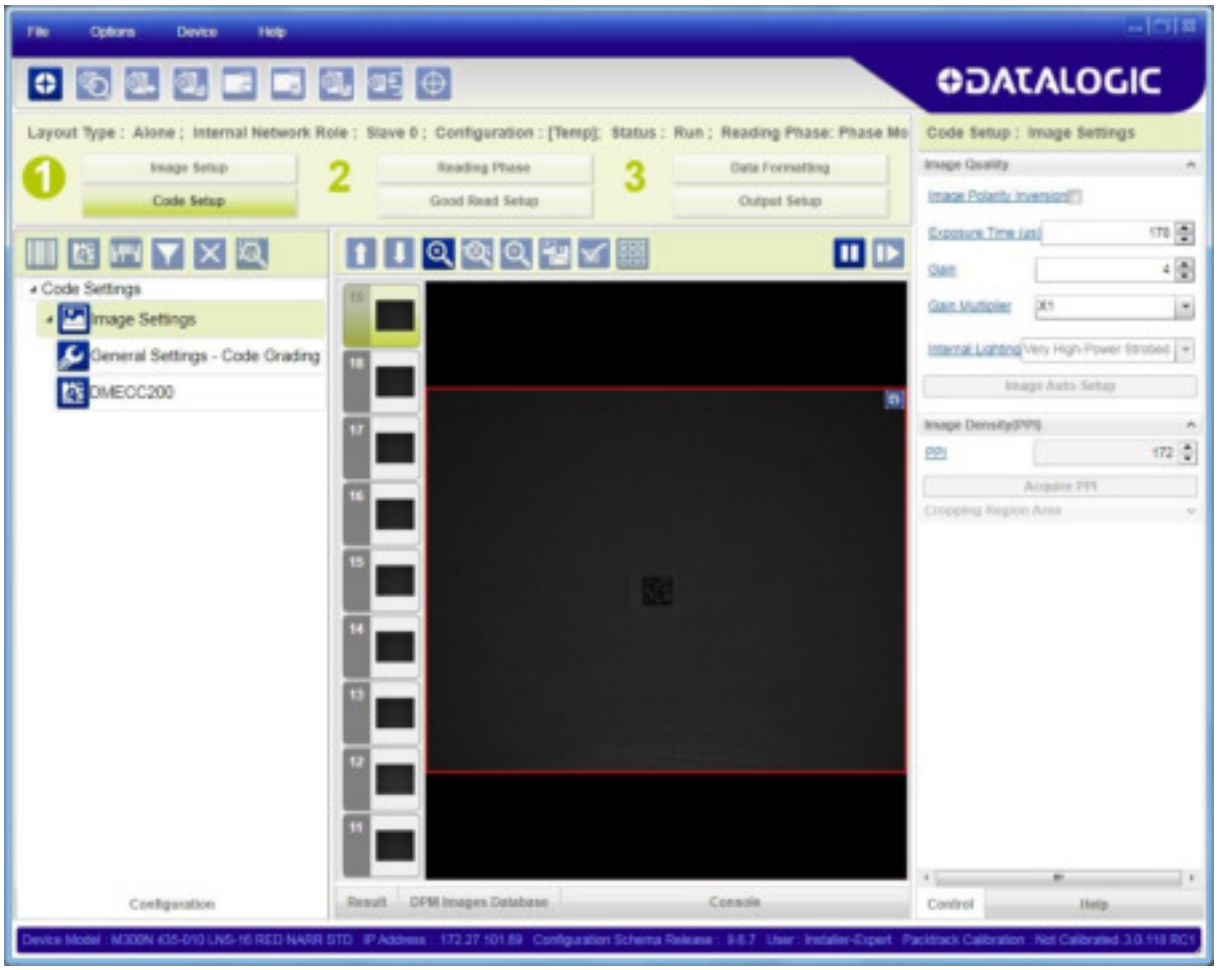

Figure 66 - Example Under Exposure: Too Dark

Over-exposure:

To correct this result it is recommended to change the following parameters in their order of appearance:

1. decrease the **Gain**
2. decrease the **Exposure Time**

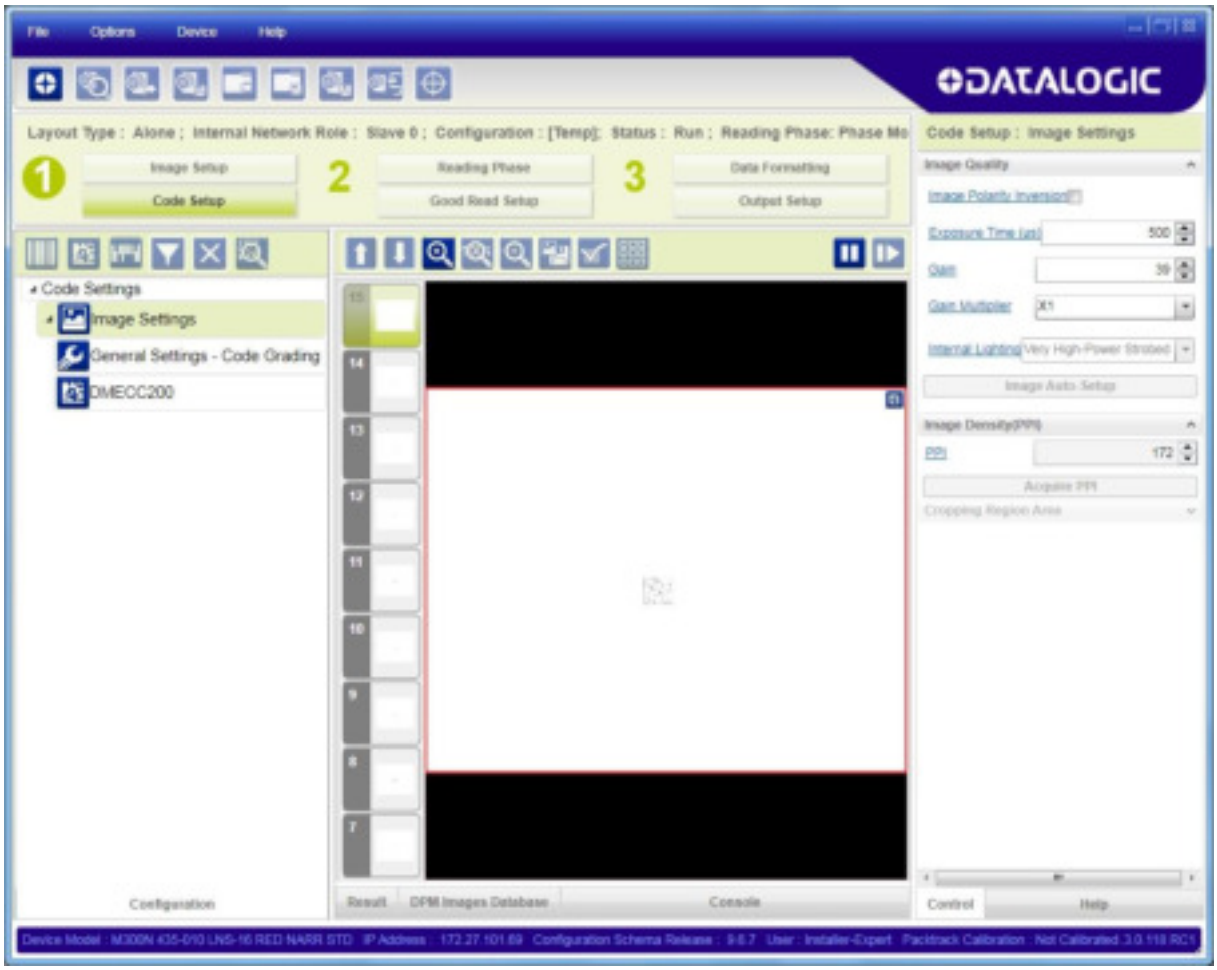

Figure 67 - Example Over Exposure: Too Light

Moving code out of the Field of View:

To correct this result and have the code completely visible in FOV, it is possible to follow one or both the procedures listed below:

- reposition the reader
- use the **Delay on Trigger** and set the time value (µs).

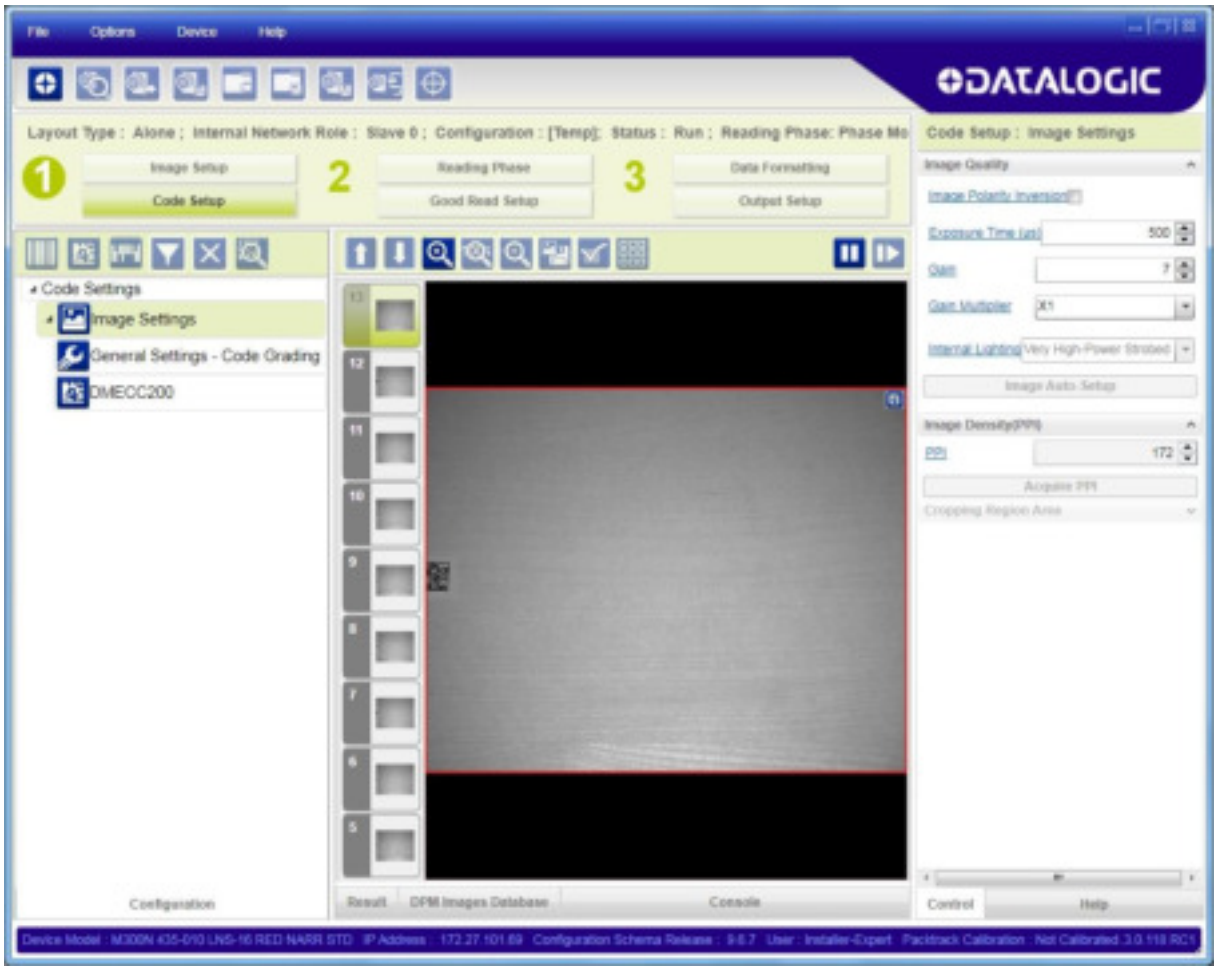

Figure 68 - Example out of FOV

7.2.3 Multi Image Acquisition Settings

When controlled variable conditions occur in the application, Multiple ***Image Acquisition Settings*** can be defined to create a database of parameter groups that handle each specific application condition. This database of pre-defined settings improves system flexibility and readiness by being applied either automatically or selectively by an activation event.

For example, an application may have several stable but different lighting conditions which require different lighting options. One Image Acquisition Setting could enable and use an internal illuminator and another setting could enable and use an external lighting system.

This feature is available for all Operating Modes.

Image Settings are found in the DL.CODE **Image Setup** step. Up to 10 different Image Settings can be configured by adding them with the icon.

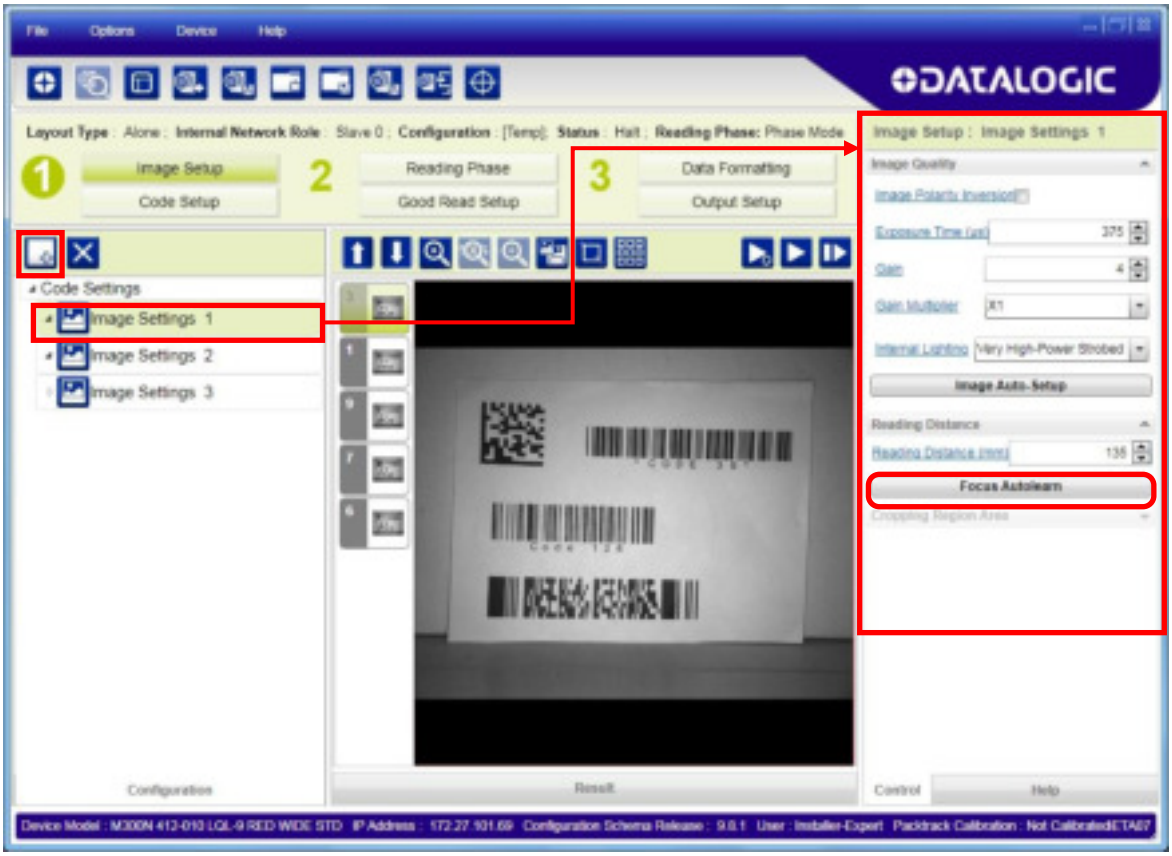

For each Image Setting condition start **Image Auto Setup**, select the Static or Dynamic Self-Tuning option; and Apply it.

Automatic Image Settings Selection

If we don't know from one item to the next which reading condition will be presented, we will cycle through the pre-defined database of Image Settings (one per acquisition) in order to automatically capture the correctly lighted image over the course of several acquisitions. When the correct condition is matched, the result should be able to produce a Good Read.

When the **Image Settings Selection** is **Automatic** (default), then these Image Settings groups will be used cyclically.

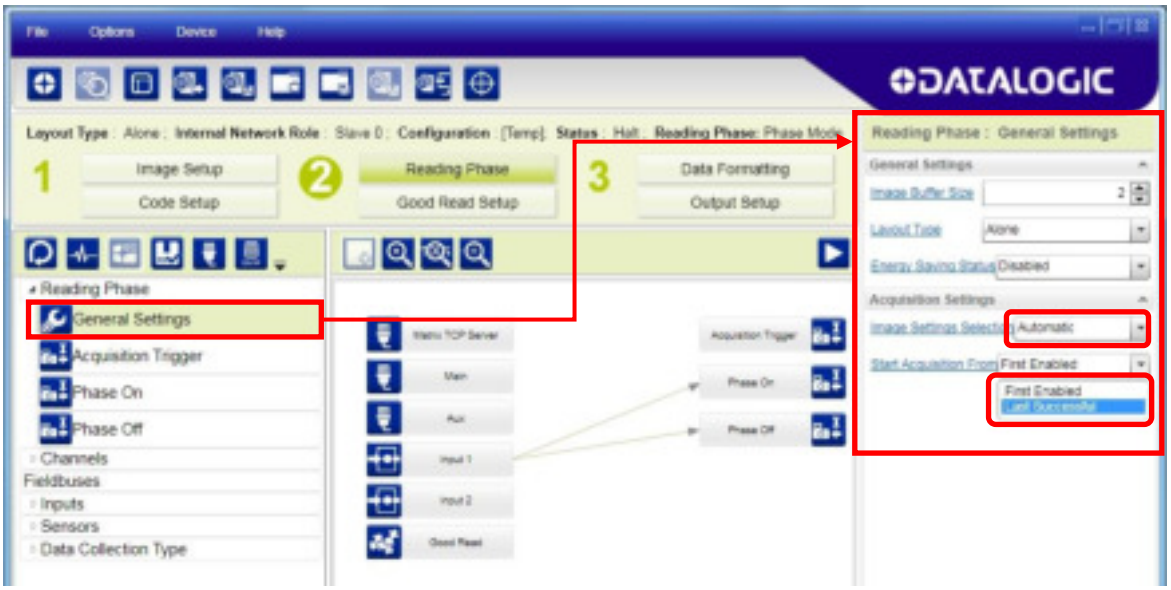

NOTE: Applications typically require more than one acquisition to obtain sufficient Good Read percentages. This means that for *N* acquisitions we will surely have captured the correct lighting condition but we will also have captured some acquisitions with the wrong lighting condition. A consequence then is that we cannot run these types of applications at the maximum speed because not all the acquisitions are useful to us. We must wait for a sufficient number of acquisitions that will guarantee a Good Read result.

If items to be read having the same lighting conditions are grouped together, then we can improve the read rate through the **Start Acquisition From** parameter. By choosing the **Last Successful** value, we will start with the Image Setting that last produced a Good Read. For this group of items the last Image Setting used will be correct for the next item and so we start each cycle with the acquisition that will potentially produce a Good Read.

External Image Settings Selection

There are some applications where the lighting conditions are known before each item is read and therefore we can pre-select the correct Image Setting from an external source.

When the **Image Settings Selection** is **External**, Acquisition Sequences are created and by default each Image Setting has its own Acquisition Sequence.

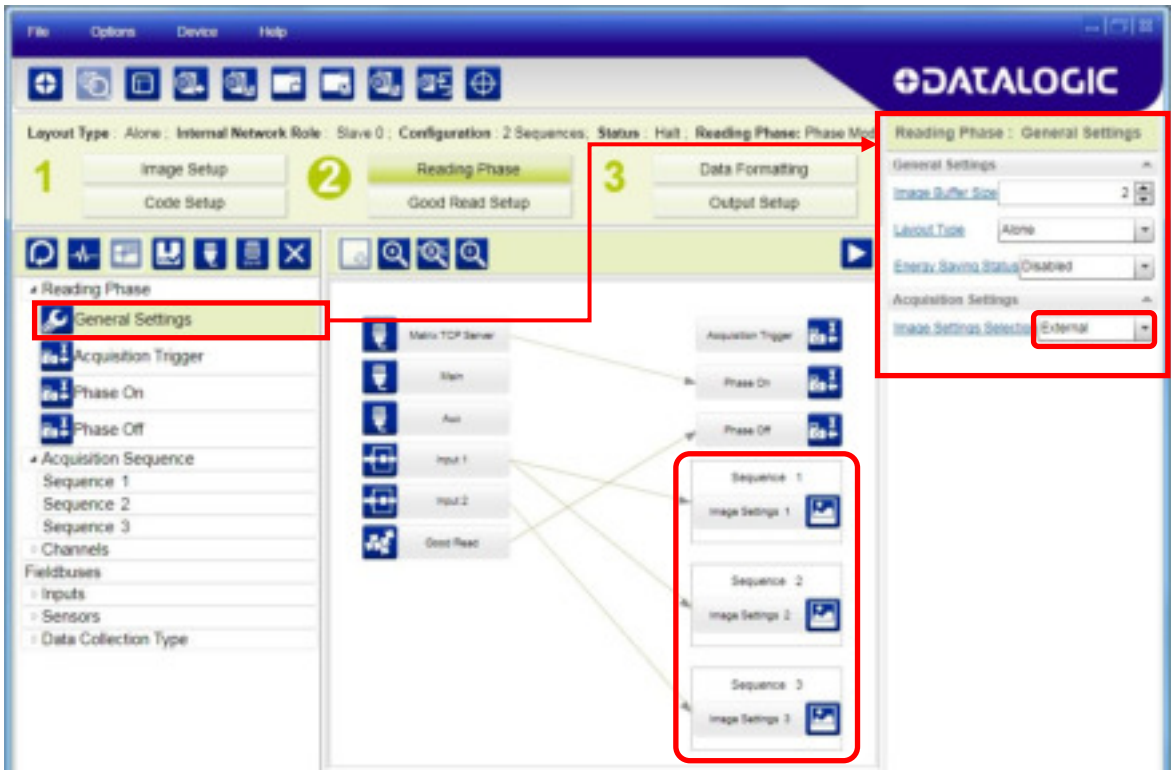

Each **Acquisition Sequence** can be activated exclusively by a single event, either through a string from an available communication channel or by a digital input.

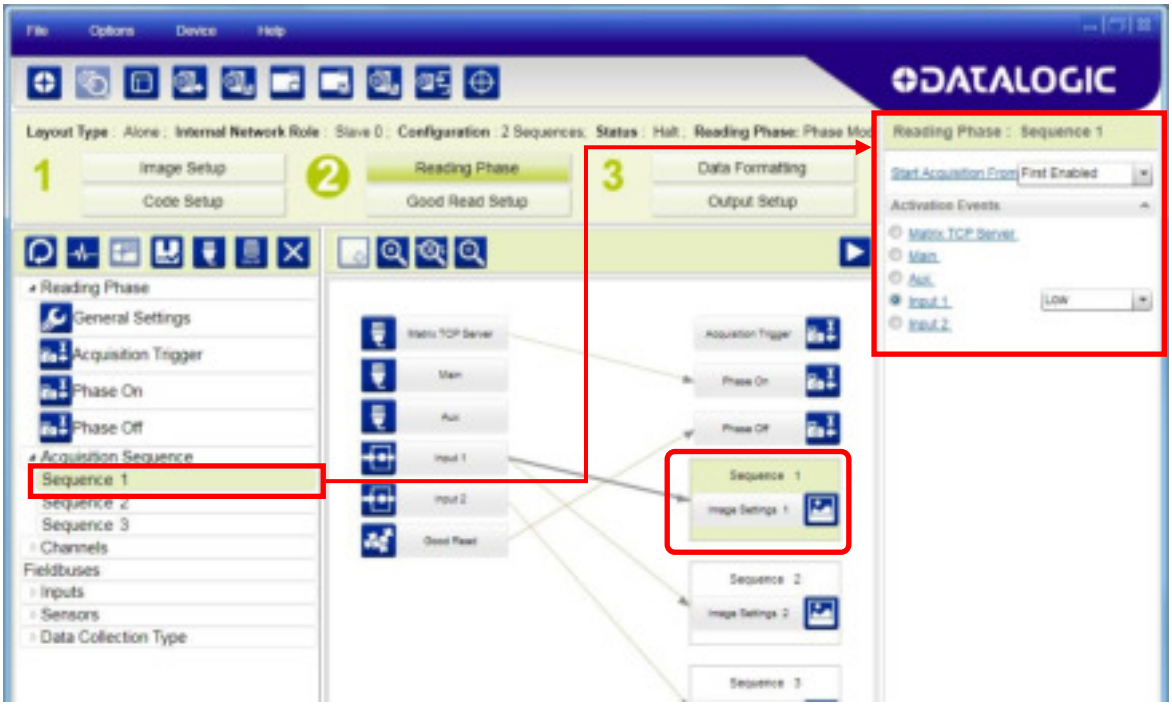

Alternatively a hybrid configuration can be made where more than one **Image Setting** can be grouped into an Acquisition Sequence by dragging it into the desired Sequence box. Select the empty Sequence box and delete it with the delete key.

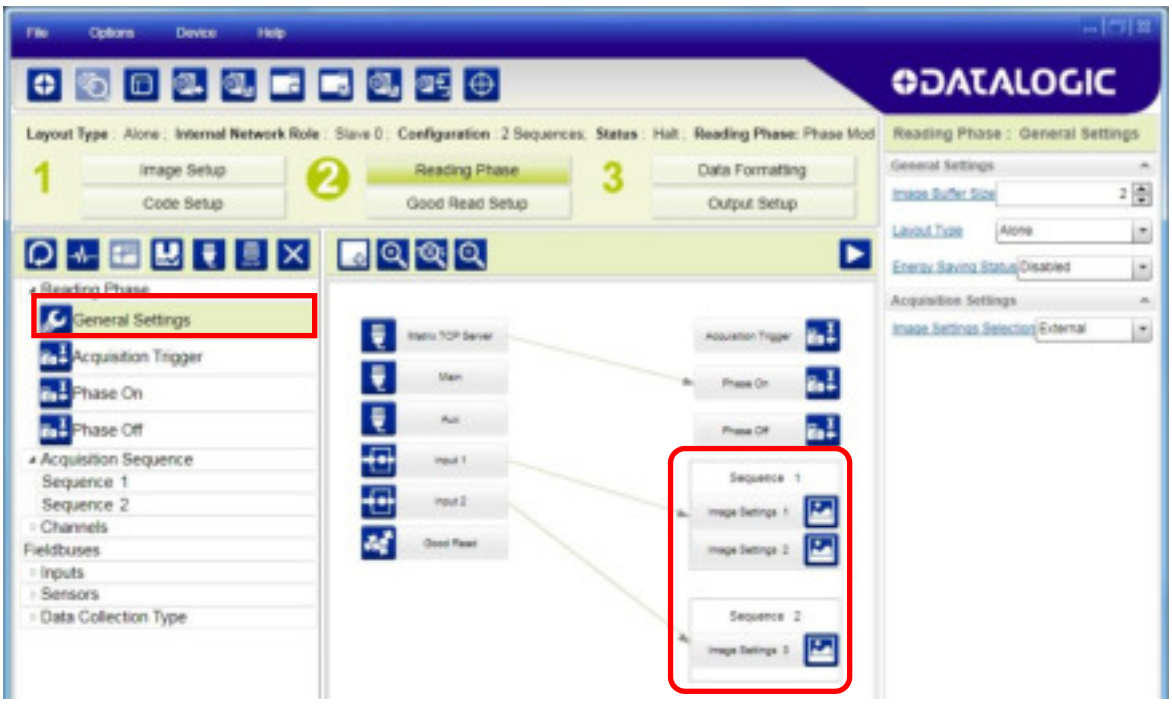

Each **Acquisition Sequence** can be activated exclusively by a single event, either through a string from an available communication channel or by a digital input.

In this case the **Start Acquisition From** parameter can improve the read rate for that Sequence. It has no meaning for a Sequence containing only one Image Setting.

7.2.4 Image Cropping

In some applications, the Image Cropping feature in DL.CODE can help to increase decoding and result performance. Image cropping is performed from the Image Setup tab by clicking on the Add Cropping Region icon as shown below.

In Matrix 450N the frame rate is dependent on the number of rows and columns in the defined window. Image cropping allows reducing the Image processing area from the full FoV to a smaller area where codes are present. By excluding portions of the FoV, processing time is reduced.

After clicking the Add Cropping Region icon, a blue border appears which by default is equal to the FoV.

By dragging the edges with the mouse (resizing) you can crop the image to a specific location where codes are present. The numbers in the blue boxes refer to pixel references.

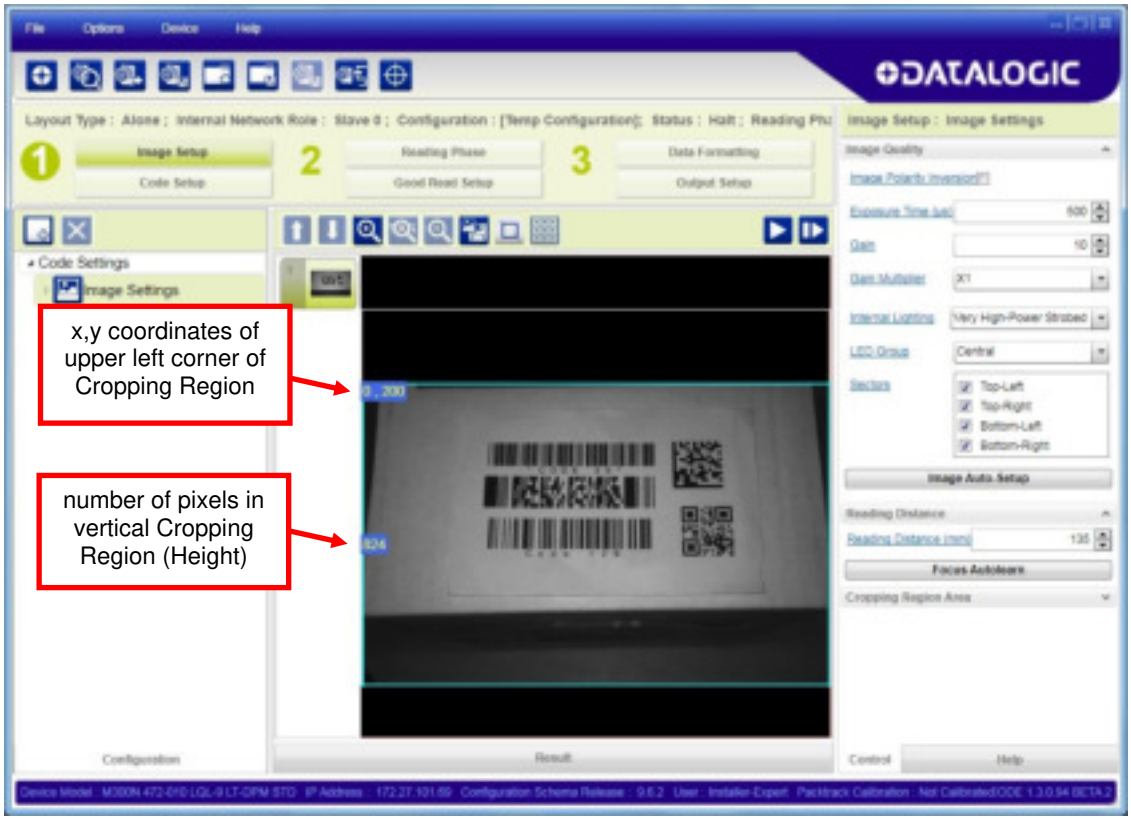

The cropped area can be moved by dragging the center.

You can also set the cropped image size and position through the Cropping Region Area group of parameters; size = **Width** and **Height**, position = **Left, Top** (x,y) coordinates.

7.2.5 Direct Part Marking Applications

For **Data Matrix** family codes the ***Decoding Complexity*** parameter is available when Processing Mode is set to Standard and selects the decoding algorithm according to the printing/marking technique used to create the symbol and on the overall printing/marking quality.

The possible selections progress from Low to Very High where Low can improve decoding time for good print/mark quality and/or relatively normal size codes. This is the default setting. Very High can improve the decode rate for low print/mark quality and/or small size codes. This algorithm is much more aggressive but in general it may have longer decoding times than the lower complexity algorithms. **To minimize decoding time it is better to select the lowest value that still guarantees good decoding.**

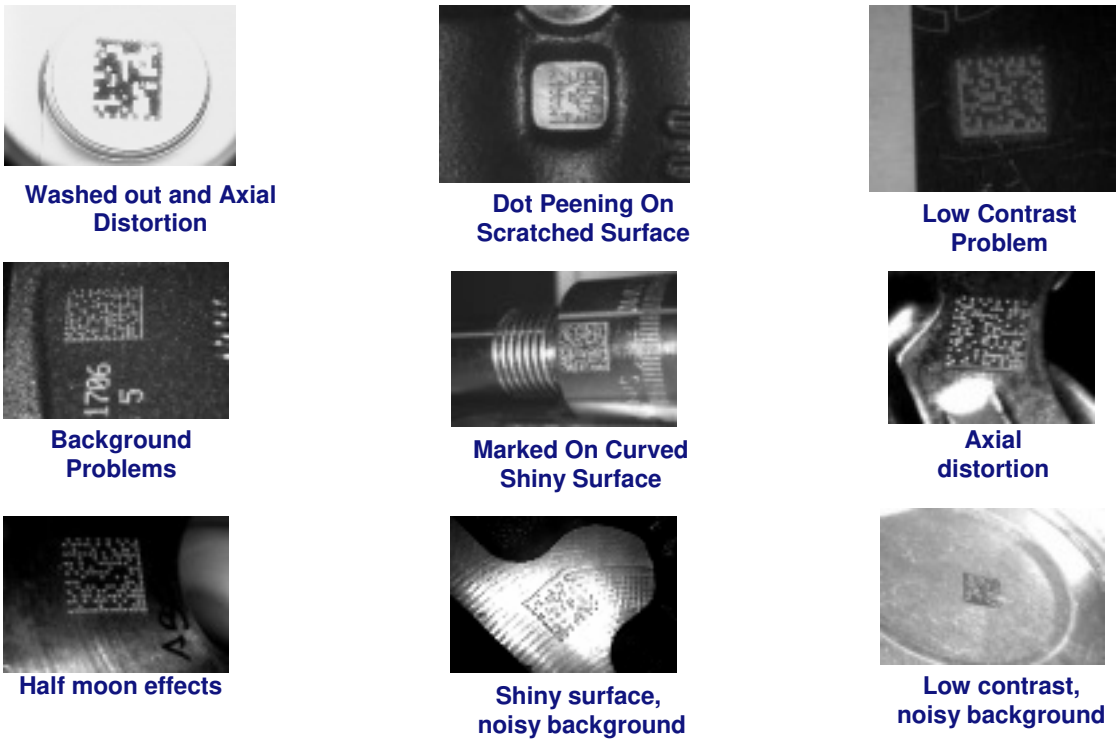

Figure 69 – Problematic Direct Part Marking Examples

For **QR** code the ***Decoding Method*** parameter allows the Dot Peen Decoding algorithm to be selected which improves the decode rate for low quality Direct Part Mark codes and in general for Direct Part Mark codes with dot peening type module shapes.

Image Filter

Sets the filter to be applied to the image before being processed. This parameter can be used to successfully decode particular ink-spread printed codes (ex. direct part mark codes).

Different filters can be applied to a single code or group of codes in one or more ***Image Settings.*** See the DL.CODE User's Manual for examples of Image Filter application.

The ***Erode*** Filter enlarges the image dark zones to increase readability.

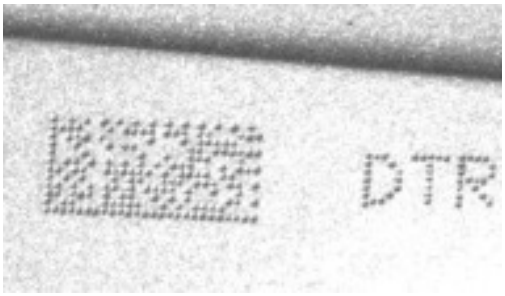

Before - No Read

After - Readable

Erode

The ***Dilate*** Filter enlarges the image white zones to increase readability.

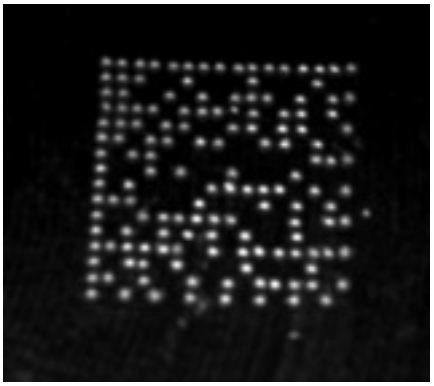

Before - No Read

After - Readable

Dilate

The ***Close*** filter eliminates dark areas (defects) in the white zones of the image.

Before - No Read

After - Readable

Close

The ***Open*** filter eliminates white areas (defects) in the dark zones of the image.

Before - No Read

After - Readable

Open

The ***Contrast Stretching*** filter maximizes image contrast.

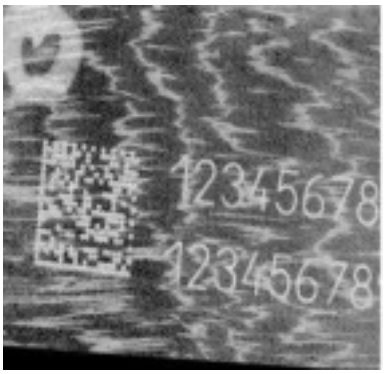

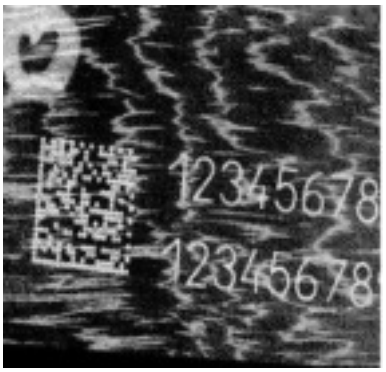

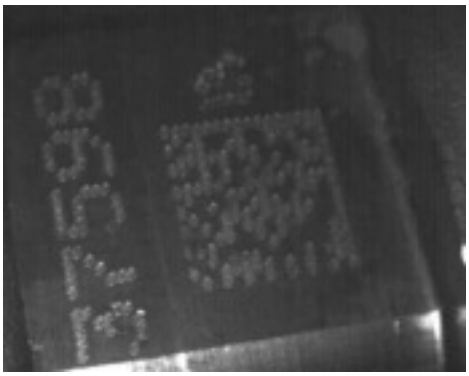

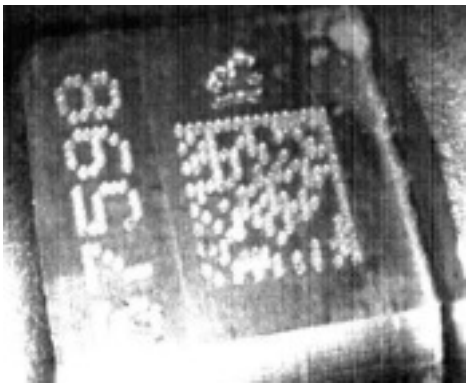

Before - No Read

After - Readable

Contrast Stretching

The ***Histogram Equalization*** filter makes the gray level distribution uniform.

Before - No Read

After - Readable

Histogram Equalization

The ***Smoothing*** filter deletes small (insignificant) details in the center of the image.

Before - No Read

After - Readable

Smoothing

The ***Sharpening*** filter improves out of focus images.

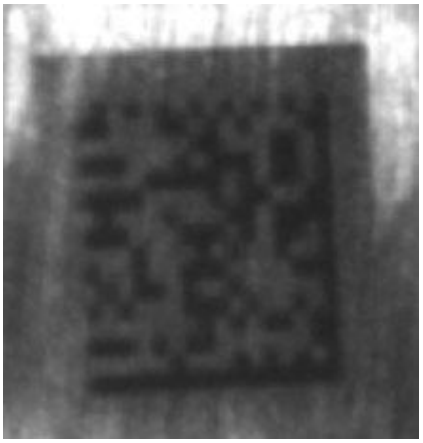

Before - No Read

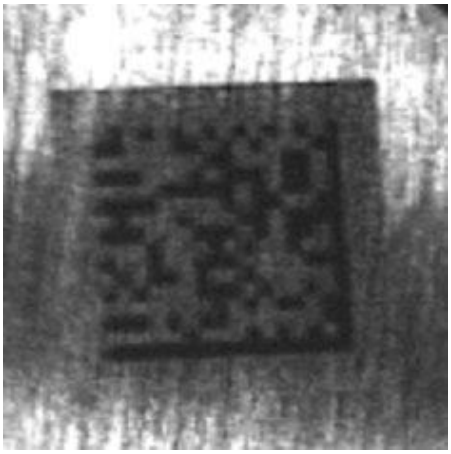

After - Readable

Sharpening

The ***Deblurring*** filter improves blurred images.

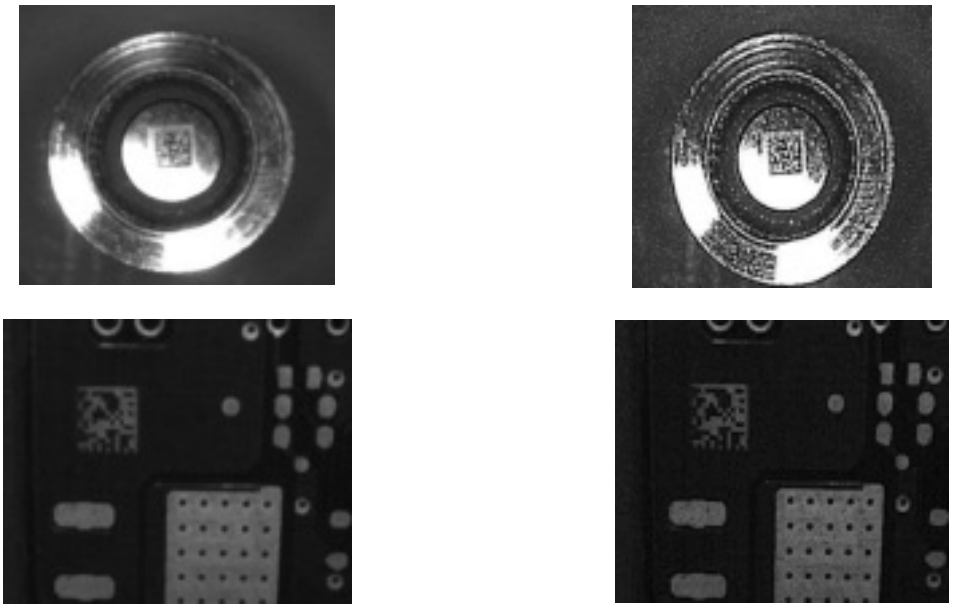

Before - No Read | After - Readable

Deblurring

The ***Black Enhancement*** filter produces a nonlinear increase in the black level for light images.

Before - No Read | After - Readable

Black Enhancement

The ***White Enhancement*** filter produces a nonlinear increase in the white level for dark images.

Before - No Read | After - Readable

White Enhancement

7.3 PASS-THROUGH CONFIGURATIONS

Starting from software version 1.3.0, DL.CODE and Matrix N family readers support pass-through multi device configurations.

The pass-through configuration allows individually working devices (Alone), to collect data from other devices (also working Alone), and pass this data to a third device through a different communication channel.

The following screenshots show the pass-through configuration settings for the three devices in the example in par. 5.4.

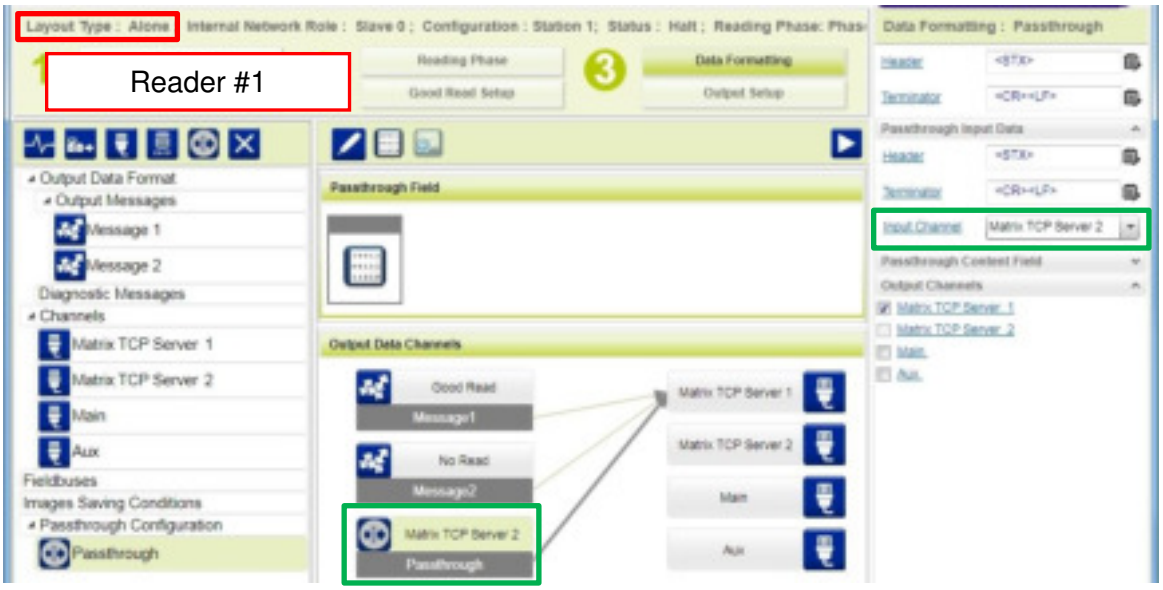

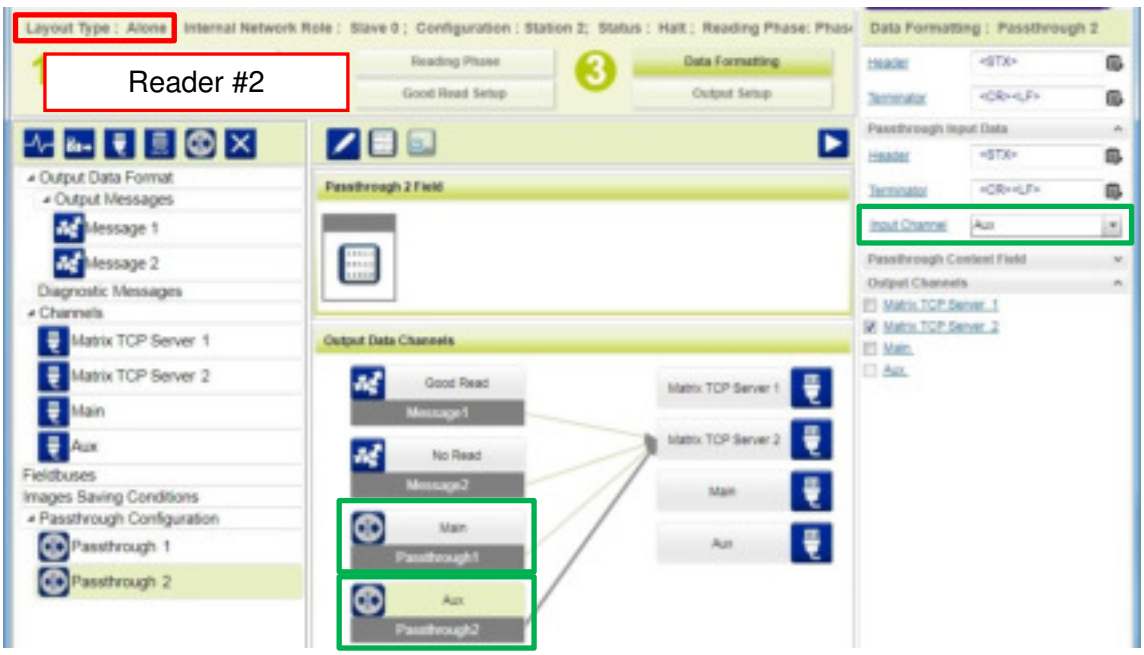

7.4 INTERNAL NETWORK CONFIGURATIONS

Internal Network configurations (also called Master/Slave configurations), are designed to collect data from several devices connected together in an ID-NET™ network and send data output to the Host system.

DL.CODE has a Net Autoset feature for the Internal ID-NET Network which automatically recognizes and assigns addresses to all connected Slave readers.

In order to automatically recognize the ID-NET Slaves, all devices must be physically installed and electrically connected (including ID-NET network wiring).

The general procedure (also detailed in the following paragraphs) is to:

1. Mount all the readers mechanically (refer to par. 3.2 and **Error! Reference source not found.**) and electrically (refer to par. 4.3) with factory default settings (Layout Type = Alone, Internal Network Role = Slave).

   In order to automatically recognize the ID-NET Slaves, all devices must be physically installed and electrically connected (including ID-NET network wiring). Run DL.CODE and verify that all the devices are discovered and shown in the device list area.

2. Connect to the designated Master device in DL.CODE and open the **Setup Internal Network Configuration**. You will be prompted to change the device to Master. Click OK. The Slave units will automatically be recognized. See par. 7.4.1.

3. Depending on the application, select Multidata, Synchronized Phase Mode or Synchronized PackTrack Configuration.

4. Connect to each Slave reader via Ethernet and set the Slave specific parameters depending on the application type. Save each Slave specific configuration. See par. 7.4.2 or 7.4.3.

5. For Synchronized networks Verify/Test network performance. See par. 7.4.4.

6. Perform the **Backup current Internal Network configurations** procedure. See par. 7.5.1.

7.4.1 Master Configuration

First start with the desired device to assign as ID-NET Master (current default setting is Slave). Click on Setup Internal Network Configuration from the Task area.

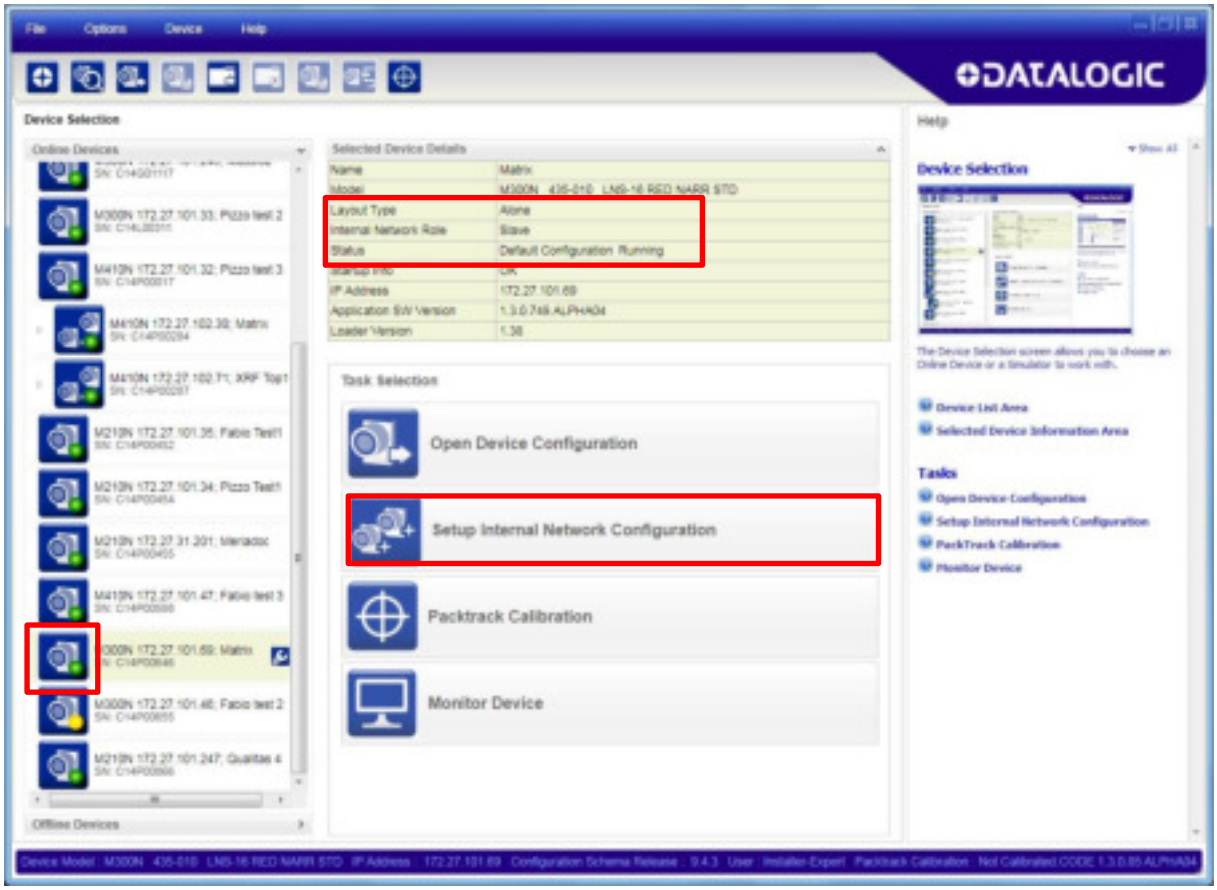

You will be advised that the device role will be changed to Master.

Click OK. The Net Autoset feature automatically starts to find Slave devices connected to the ID-NET network of the Master.

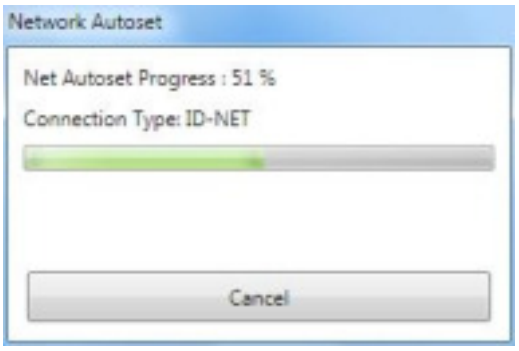

When finished, all the Slaves should have been correctly recognized. If not, verify all device connections and power and then repeat the operation by clicking on the Start Net Autoset button.

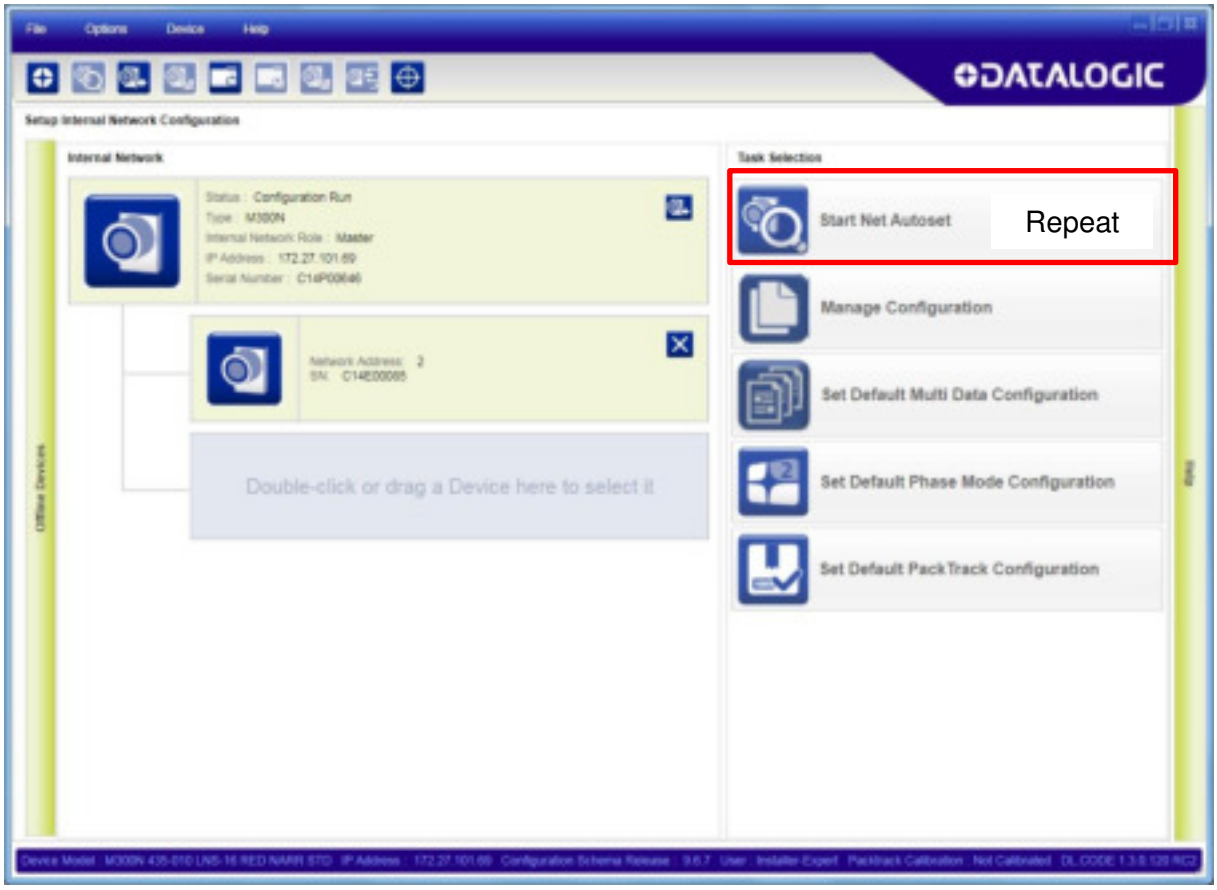

Depending on the application, select one of the Default Internal Network Configurations: **Multidata**, **Synchronized Phase Mode** or **Synchronized PackTrack**.

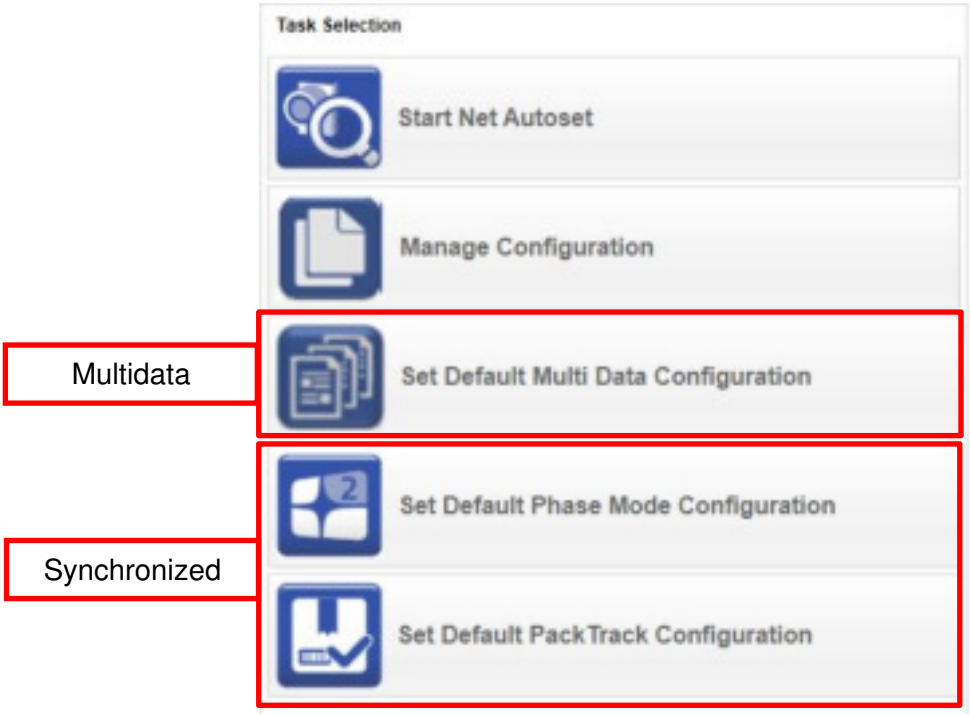

This selection will open a pre-configured job for the Master reader according to the selection. Follow the specific application instructions in the following paragraphs.

7.4.2 Multidata ID-NET Network Configurations

The Multidata ID-NET network communications between Master and Slave are managed by the application job (configuration) using the pass-through feature. A pre-configured job is loaded with the correct pass-through settings for both the Master and Slaves when the Default Multidata Configuration is selected from the Internal Network Setting feature.

1. Complete the configuration of all the application parameters (including Image Setup) and save them to the Master with an application specific name and **without** the option to **Clone Master configuration on Slaves**.

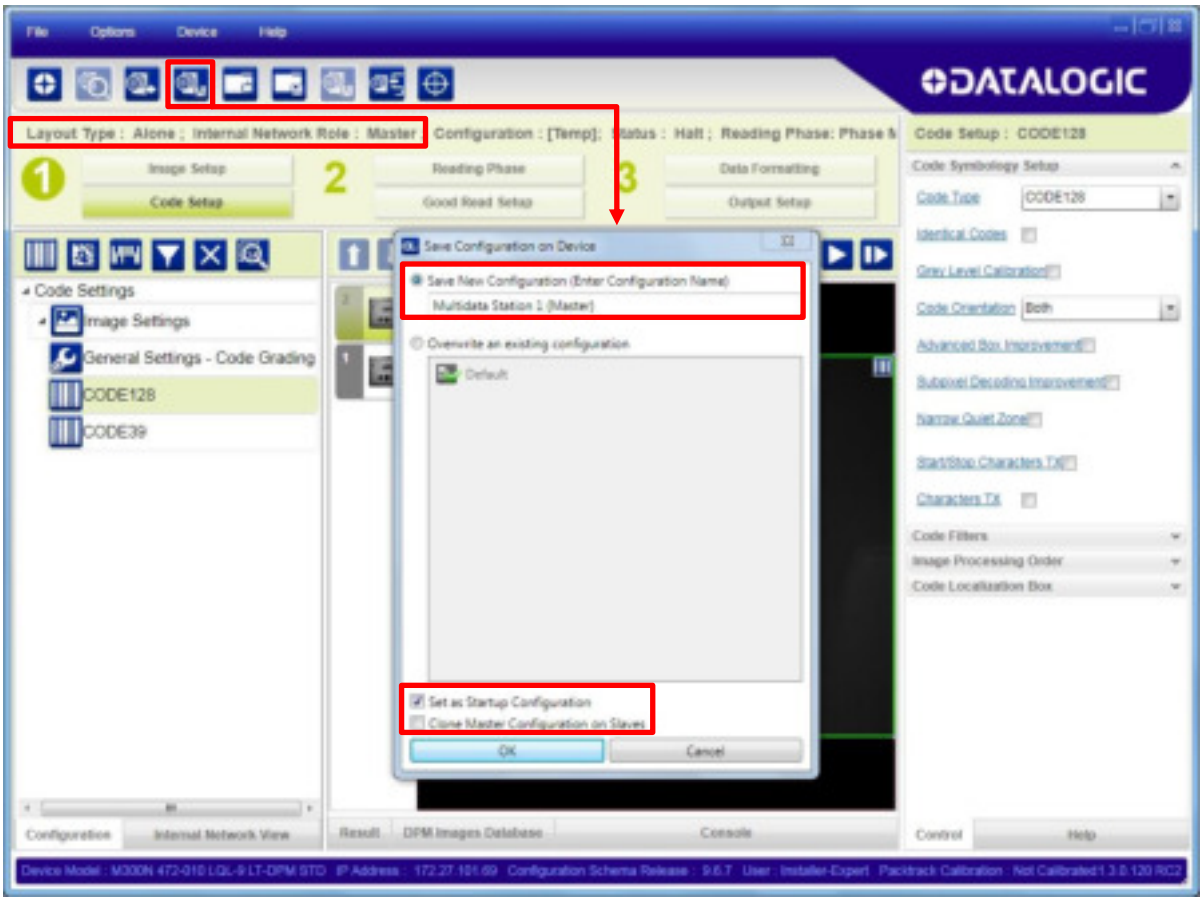

Figure 70 – Saving Multidata Configuration to Master

The jobs must not be cloned because the Master and Slaves have different input/output communication channels. The readers are also working independently from each other, often on separate stations with different code reading requirements, different operating modes, etc.

2. Connect to each Slave reader via Ethernet (see note below), and set all the configuration parameters of each Slave device.

NOTE: If necessary, Slave device photometric (Image Setup) parameters must be configured separately through DL.CODE. This is preferably done through each device's Ethernet TCP/IP channel. If Slave devices are not connected to Ethernet you must temporarily (manually) connect them one by one to perform Image Setup.

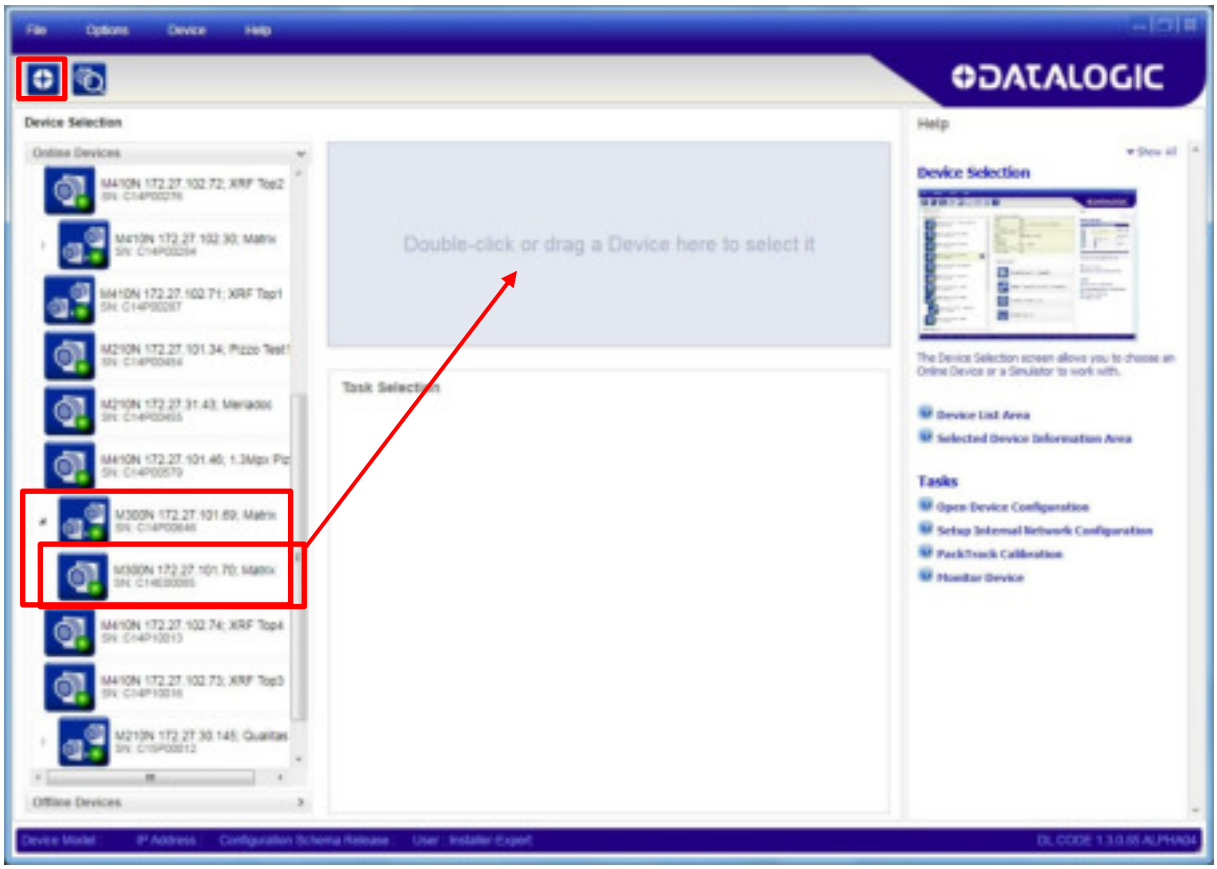

Open the Slave specific application job, (the first time it has the Master Specific name).

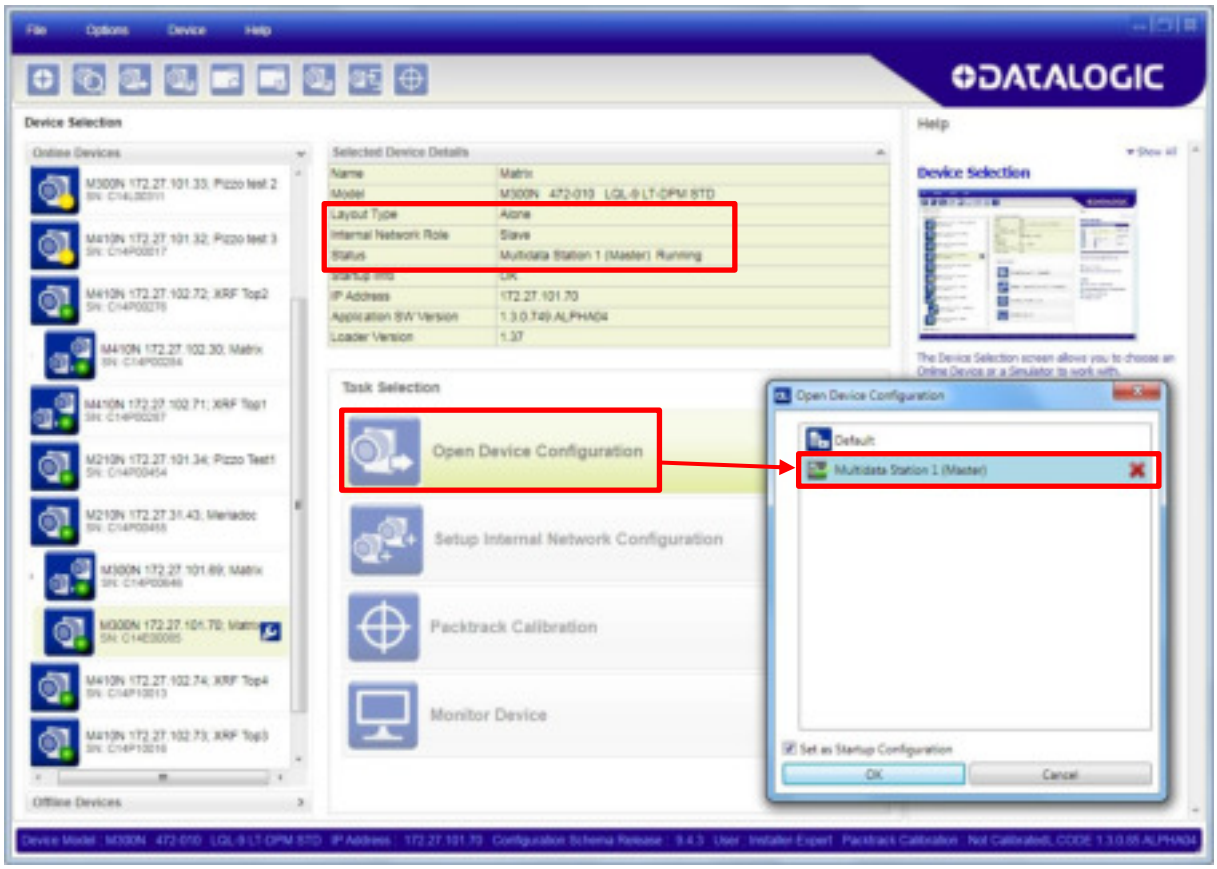

When the configuration opens, pause run mode and set all the application specific configuration parameters (including Image Setup).

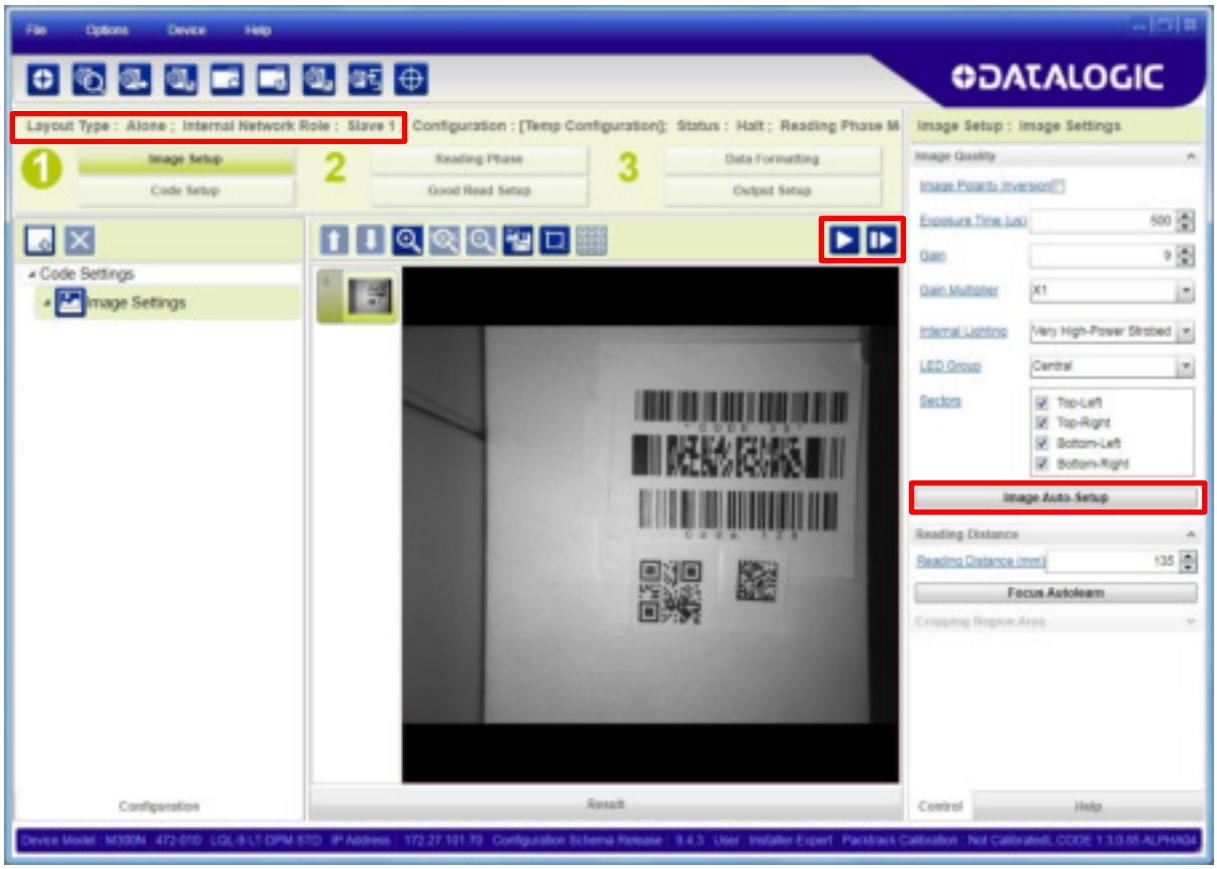

Verify the focus and decoding with the capture image and Code Setup page.

3. Now save them to a new Slave specific application job[4].

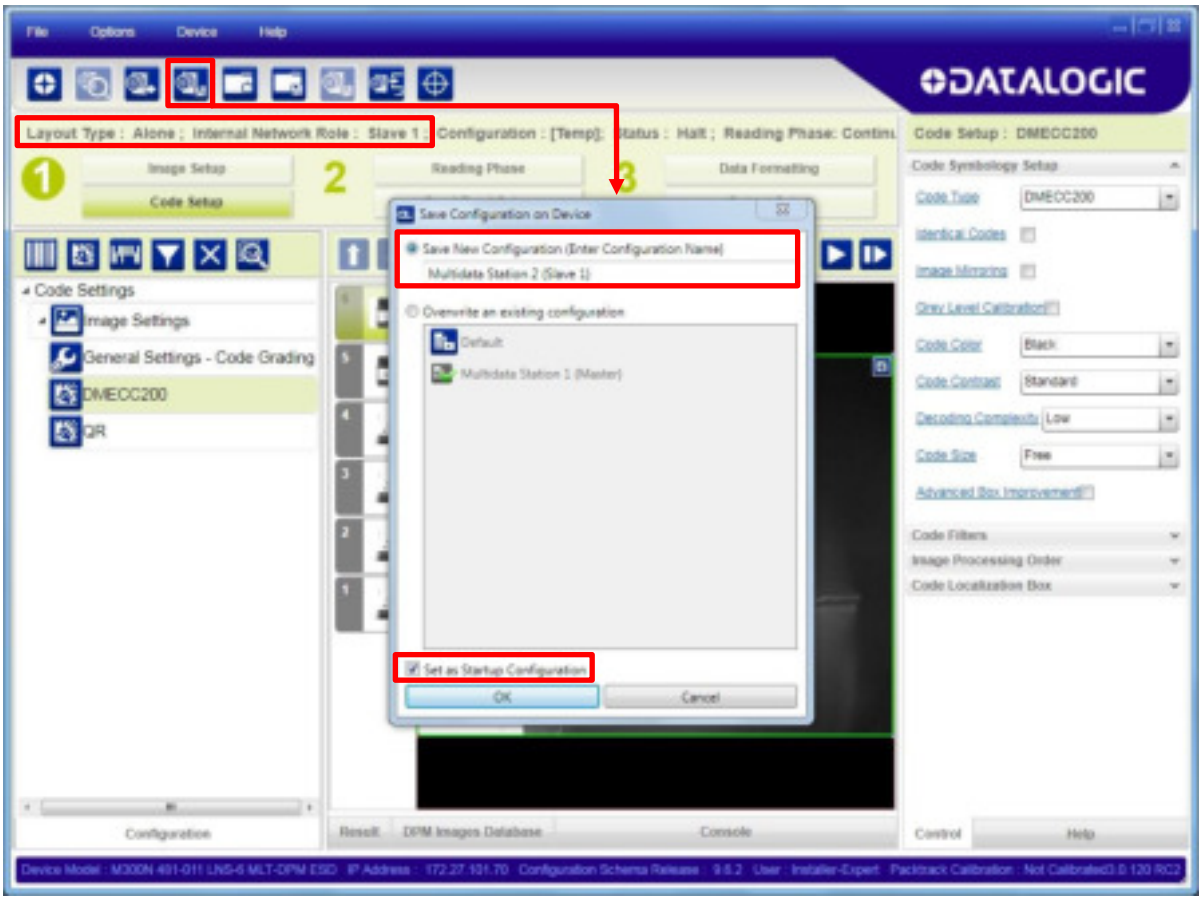

Figure 71 – Saving Multidata Configuration to Slave 1

Repeat this procedure for each Slave device until the entire network is configured.

The following screenshots show the pass-through configuration settings for the three devices in the example in par. 5.5.

[4] An application job with the same name as the Master's (but with Slave specific configuration parameters), has been saved to the Slaves. Each Slave has its own configuration parameters saved in its own copy of the application job. There are no common parameters managed by the Master for Multidata configurations.

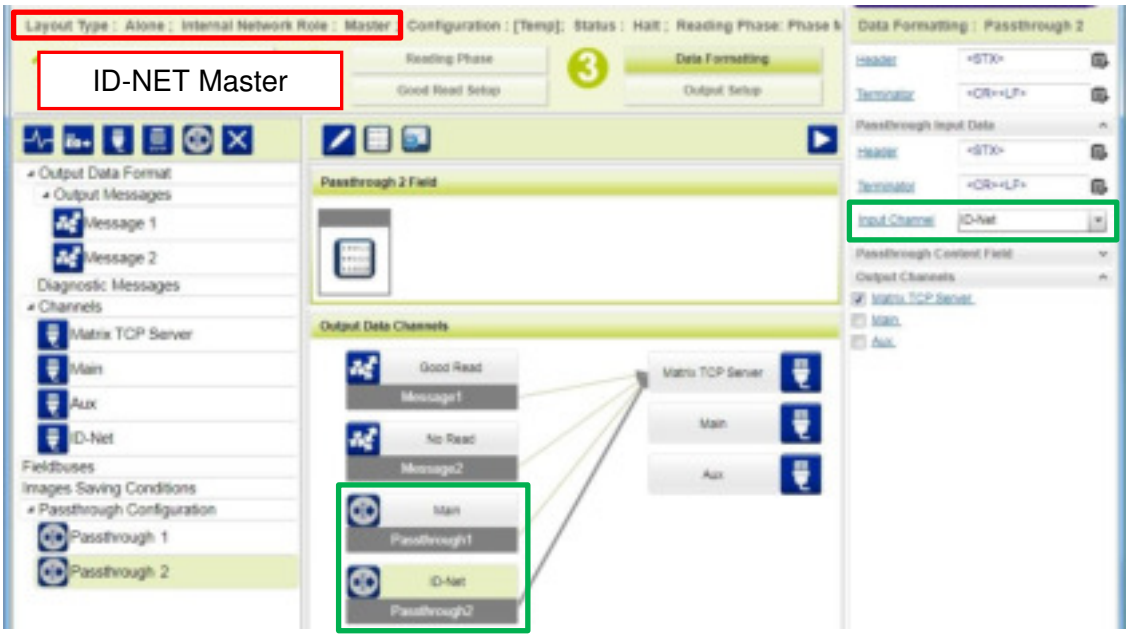
ID-NET Master

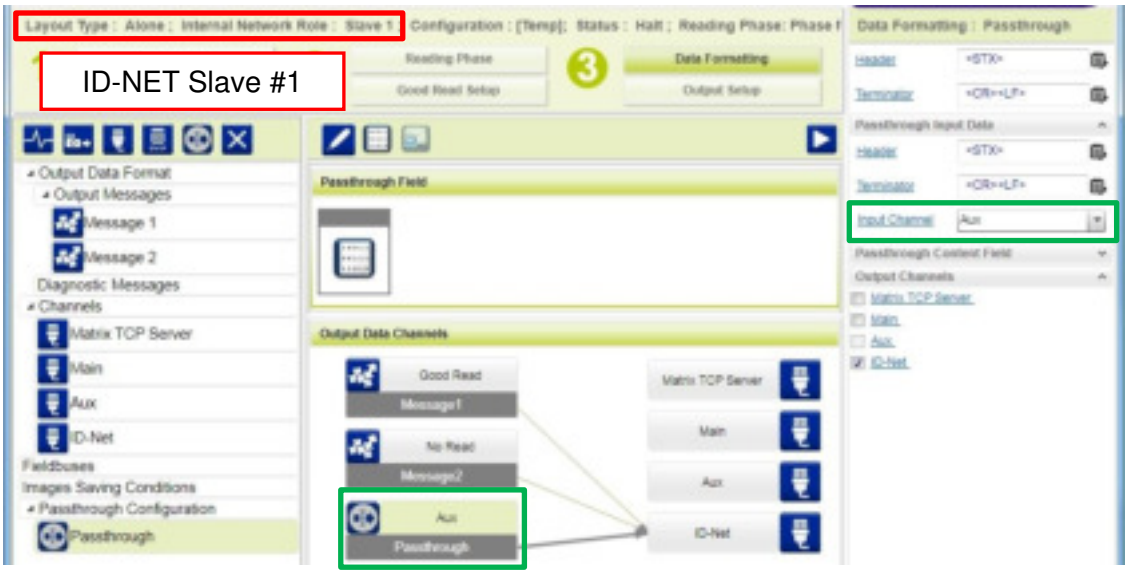
ID-NET Slave #1

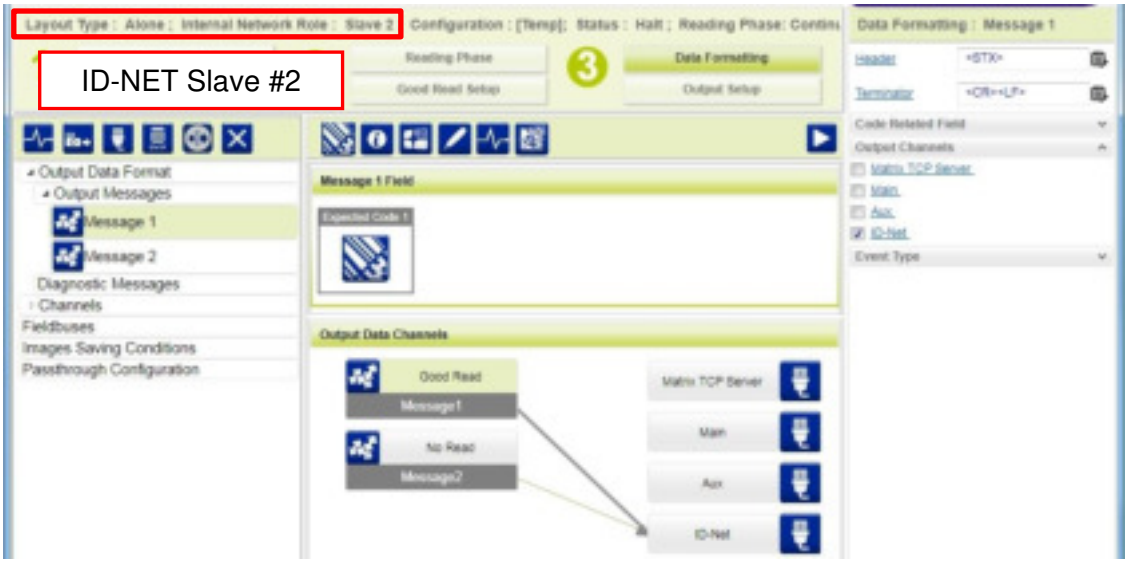
ID-NET Slave #2

7.4.3 Synchronized ID-NET Network Configurations

The Synchronized ID-NET network communications between Master and Slave are internally managed by the application software. A pre-configured job is loaded with the Synchronized Layout Type and the correct Operating Mode for both the Master and Slaves when either the Phase Mode or PackTrack Configuration is selected from the Internal Network Setting feature.

4. Complete the configuration of all the application parameters (including Image Setup) and save them to the Master with an application relative name and **with** the option to **Clone Master configuration on Slaves**.

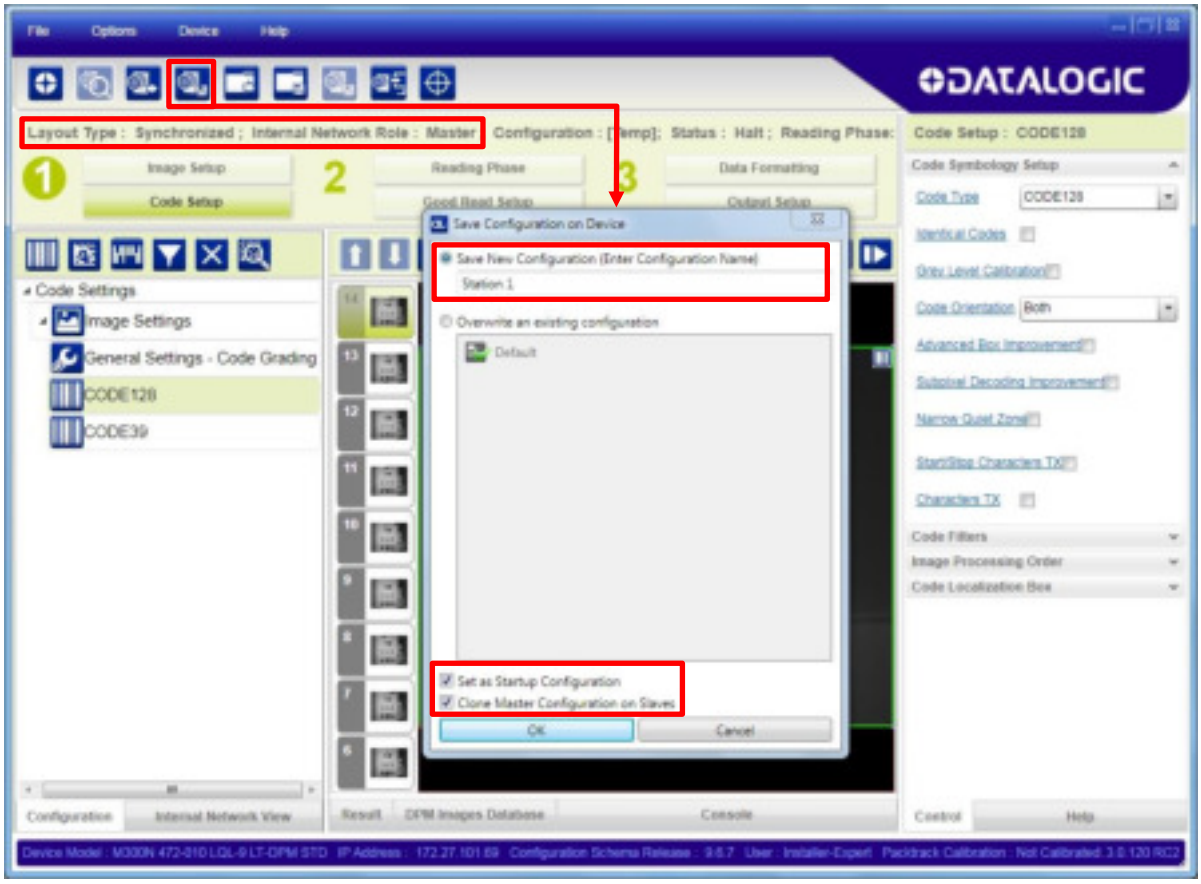

Figure 72 – Saving Synchronized Phase Mode Configuration to Master

5. Connect to each Slave reader via Ethernet (see note below), and set the Slave specific parameters.

NOTE: If necessary, Slave device photometric (Image Setup) parameters must be configured separately through DL.CODE. This is preferably done through each device's Ethernet TCP/IP channel. If Slave devices are not connected to Ethernet you must temporarily (manually) connect them one by one to perform Image Setup.

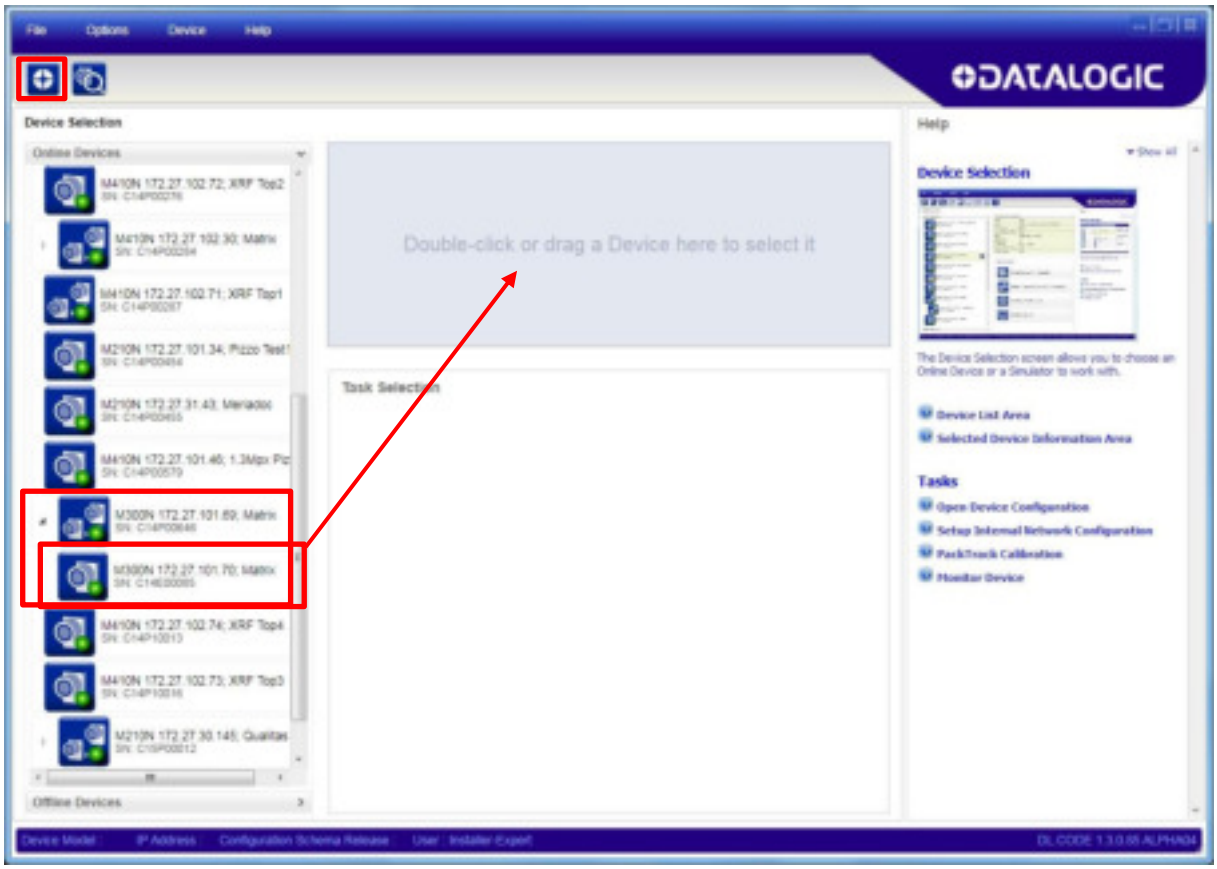

Open the cloned application job.

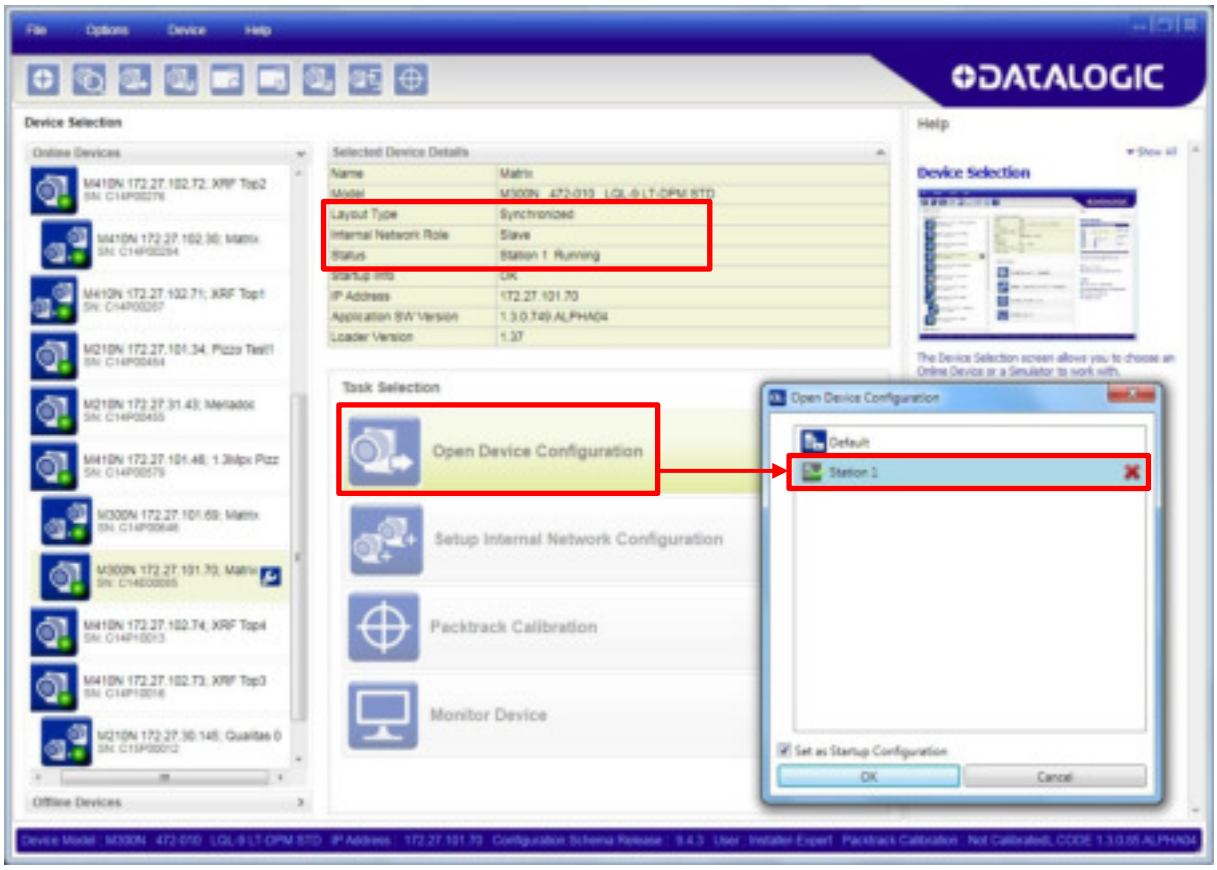

When the job opens, pause run mode and configure the Slave specific parameters. These depend on the application and include the following:

- photometric parameters (Image Auto-Setup feature in the Image Setup step)
- Acquisition Trigger Delays necessary to avoid lighting interference between adjacent or oppositely positioned readers (Reading Phase step)
- Images Saving if used (Data Formatting step)
- Encoder Sensor: if used, (for all Slaves, the Encoder Type must be set to **Internal**)

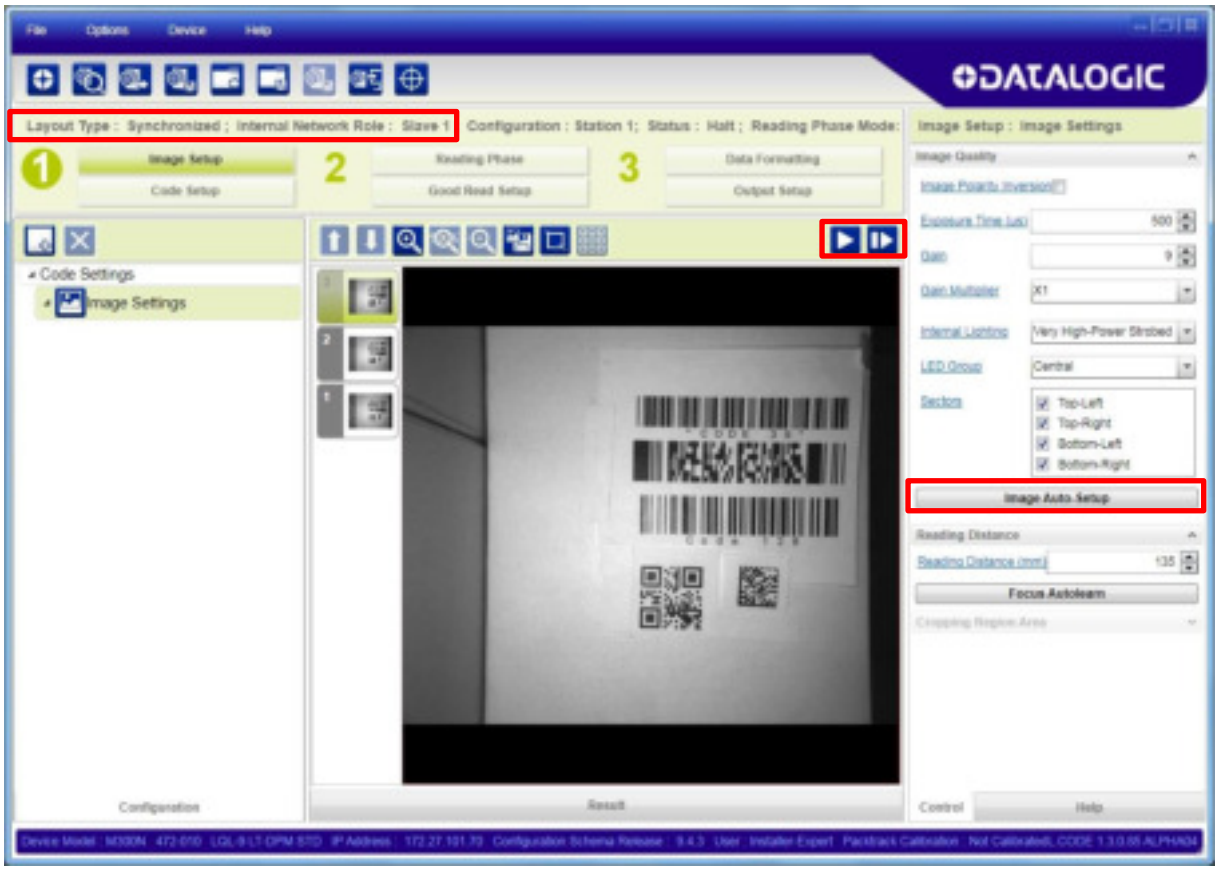

Verify the focus and decoding with the capture image and Code Setup page.

6. Now save them, overwriting the cloned application job[5].

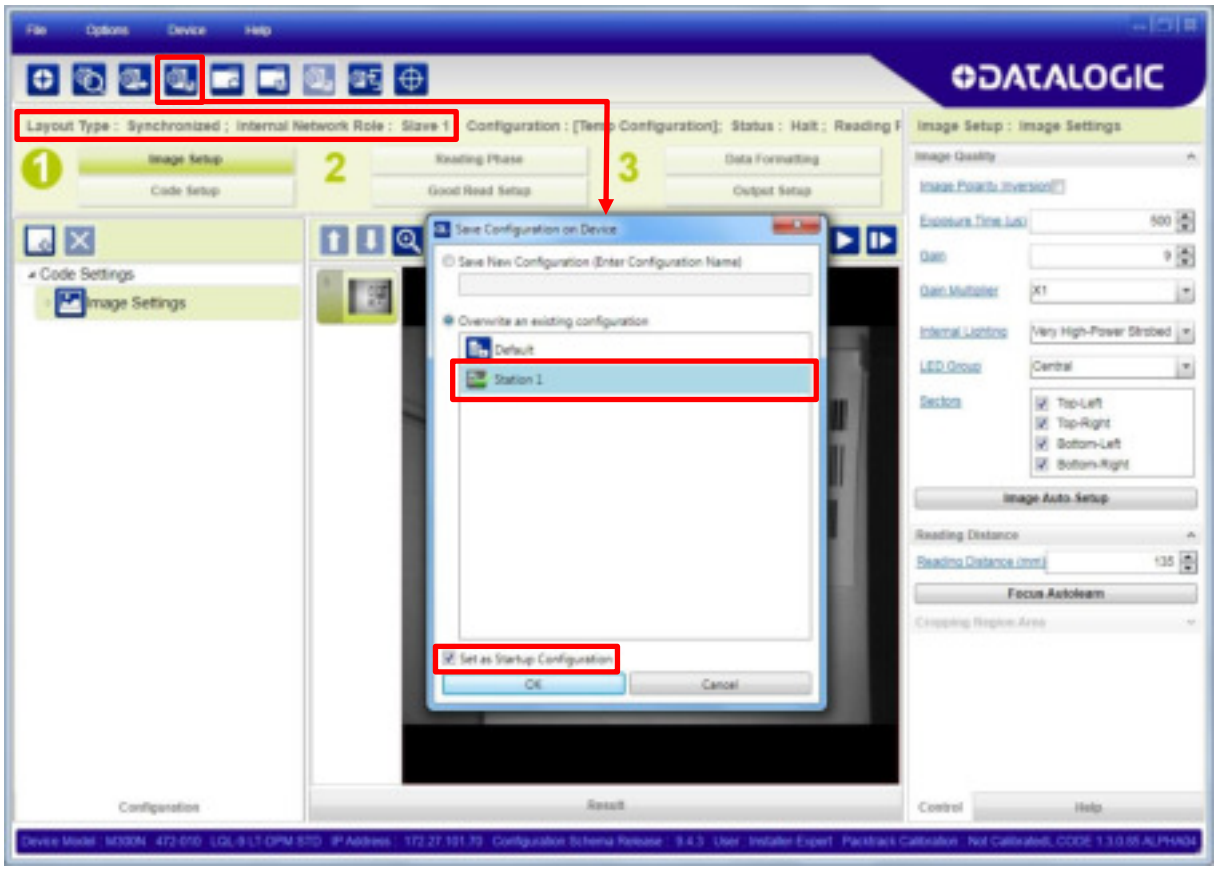

Figure 73 – Saving Synchronized Phase Mode Configuration to Slave

Repeat this procedure for each Slave device until the entire network is configured.

See par. 5.6 for an example Synchronized ID-NET configuration.

[5] An application job with the same name as the Master's has been cloned to the Slaves. Each Slave can have its own Image Setup parameters saved in its own copy of the application job. Common parameters managed by the Master such as Operating Mode cannot be modified in the Slave jobs and are shown in grey.

7.4.4 Verify Master/Slave Synchronized Configuration

From the Master configuration, run the application and monitor the output data from the DL.CODE Console or a configured channel terminal.

If necessary, as a troubleshooting tip, you can temporarily apply the **Reading Mask** field in place of each Code Content field to verify if all devices are reading. To do this:

1. Connect to the Master device via Ethernet and from the Data Formatting step, change each Expected Code Field Type from Code Content to Reading Mask.

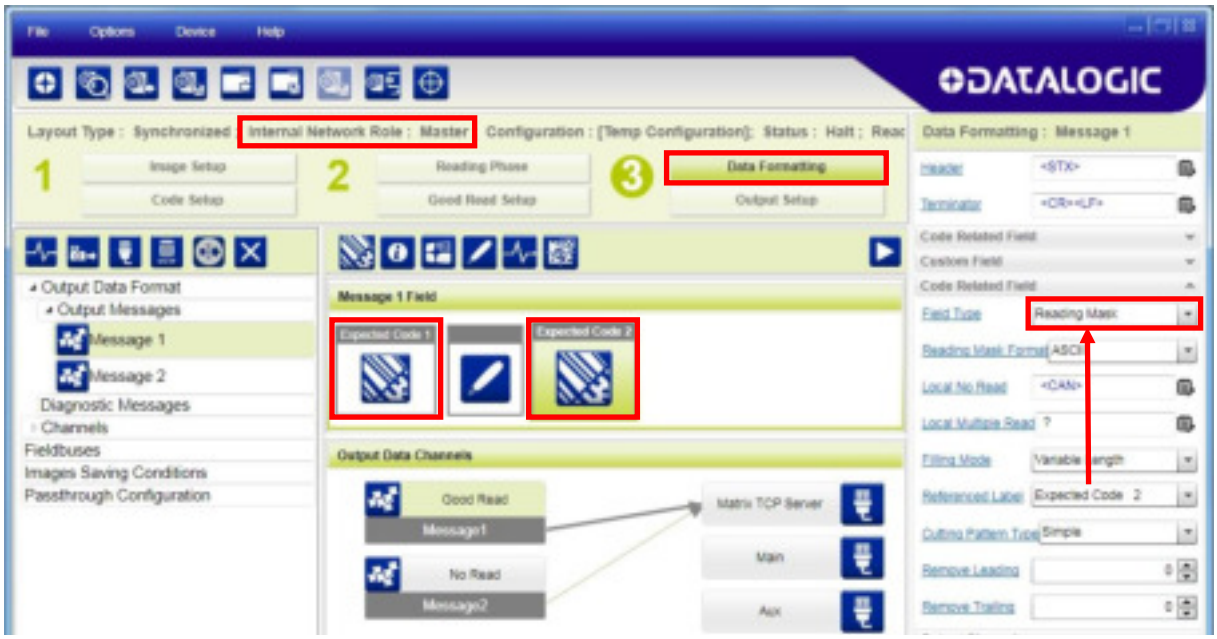

2. Run the application and monitor the output data from the DL.CODE Console or a configured channel terminal.

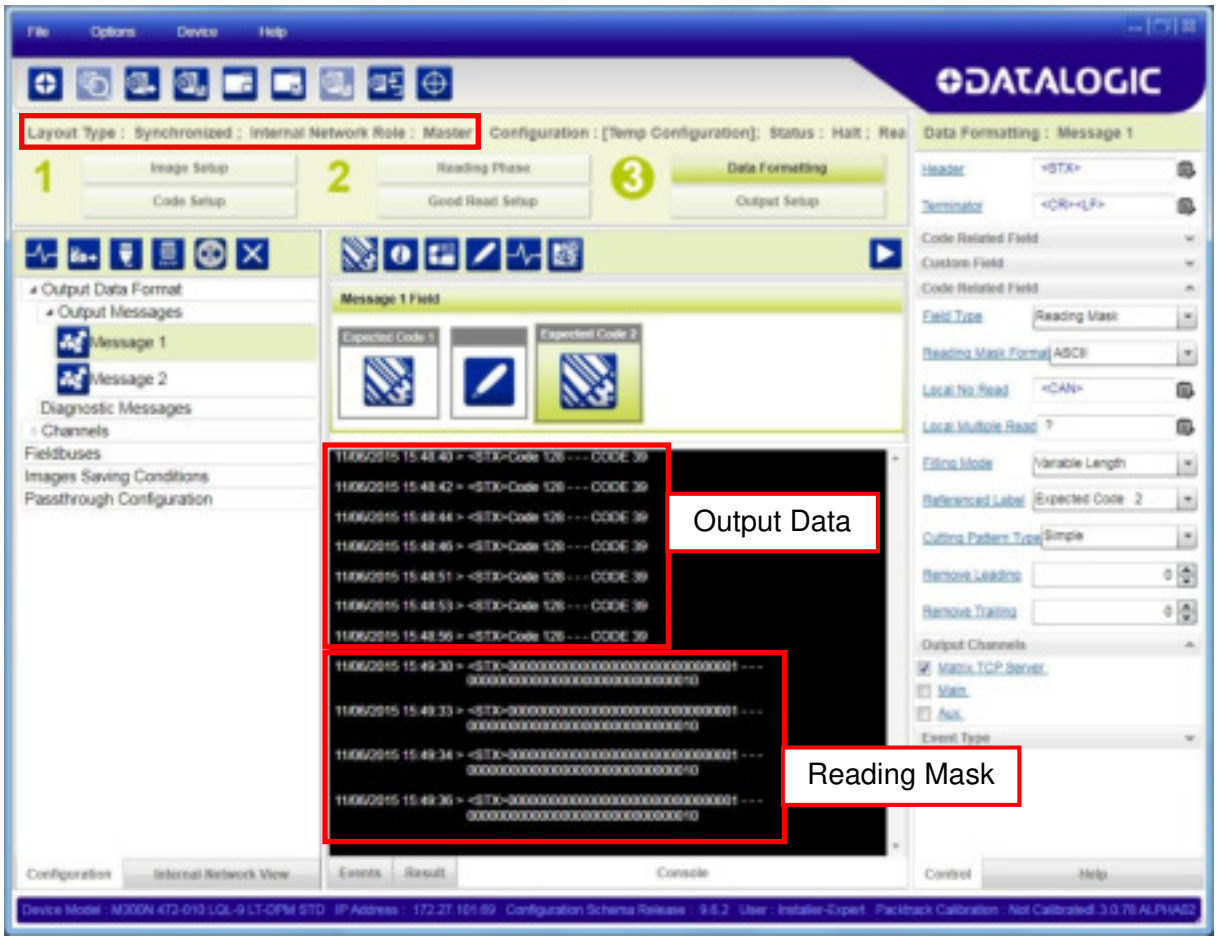

The Reading Mask shows which device reads which Expected Code. The mask is composed of a fixed 32-character string (0=No Read or 1=Read) representing the 32 possible readers in an ID-NET network. The Master is the last character in the string (first character to the right). The Slaves are shown in order from right to left (1 to 31).

Example: Master + Slave 1 = 00000000000000000000000000000011

The figure above shows the Master reading Code 128 and Slave 1 reading Code 39.

3. After verifying correct functioning of the reading devices, return the Expected Code fields from Reading Mask to Code Content.

4. If you haven't made any other changes you can exit without saving. Otherwise, save the Master device configuration overwriting its previous one, making sure to save **without Clone Master Configuration on Slaves**, otherwise the Slave configurations will be overwritten.

To view the connected Slave configurations:

1. Click on the Internal Network View tab at the bottom of the screen
2. Open the Master branch by clicking on the arrow to the left of the Master icon.
3. Select any slave.
4. Click The Configuration tab at the bottom of the screen.

By selecting the various configuration steps above you can visualize the slave configuration.

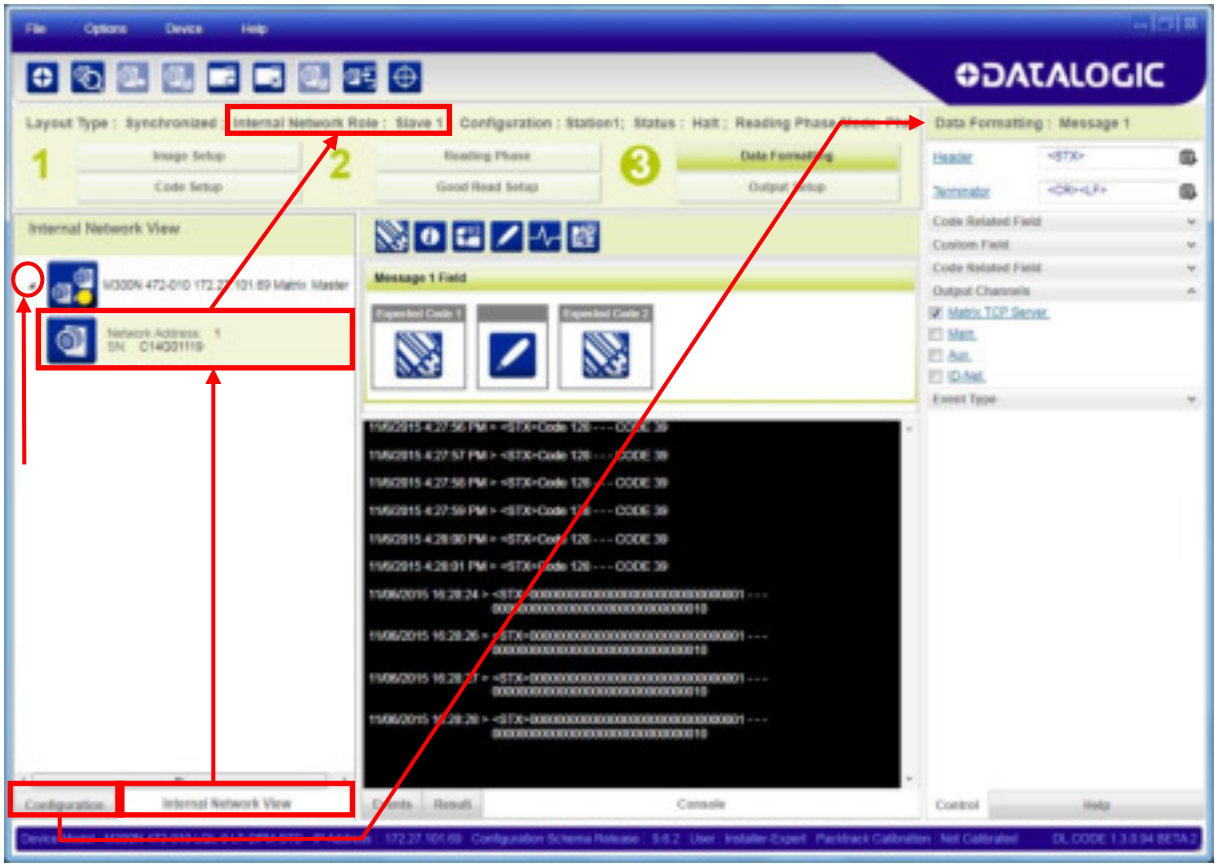

NOTE: You can modify some Slave Synchronized parameters from this view but you cannot save them here.

To save changed slave parameters here, you must click on the Master and Save the configuration overwriting it, making sure to save **without** **Clone Master Configuration on Slaves**, otherwise all the Slave configuration parameters will be overwritten.

7.5 BACKUP AND RESTORE THROUGH DL.CODE

DL.CODE allows Backup and Restore to be performed to/from the configuration PC via file or to an external storage device such as BM100/BM150.

DL.CODE provides complete backup and restore functions (Configuration and Environmental parameters) with the following difference:

For Single Readers or individual ID-NET Slaves:

- Backup and Restore functions provide parameter storage including all configuration jobs present on the reader.

For Master Readers in ID-NET Master/Slave networks:

- Backup and Restore functions provide parameter storage of only the Startup Configuration for the Master and all Slaves present in the network.

CAUTION: For Master/Slave networks any other configurations (jobs) stored in the device memory will not be backed up. Therefore upon a restore, all jobs other than the startup configuration will be overwritten (erased). It is strongly recommended to save all configurations to backup files.

The Slaves must always be configured with the same network baudrate as the Master for correct functioning including performing Backup and Restore procedures.

When performing Backup and Restore to/from file, device firmware can be included.

Regardless of the reader's network configuration, Backup to and Restore from external device is supported by DL.CODE for any reading device when connected to:

- CBX + BM100
- QLM-Series Gateways

NOTE: Before executing a Backup to a BM100 backup module make sure the Write Protection switch is set to Unlocked.

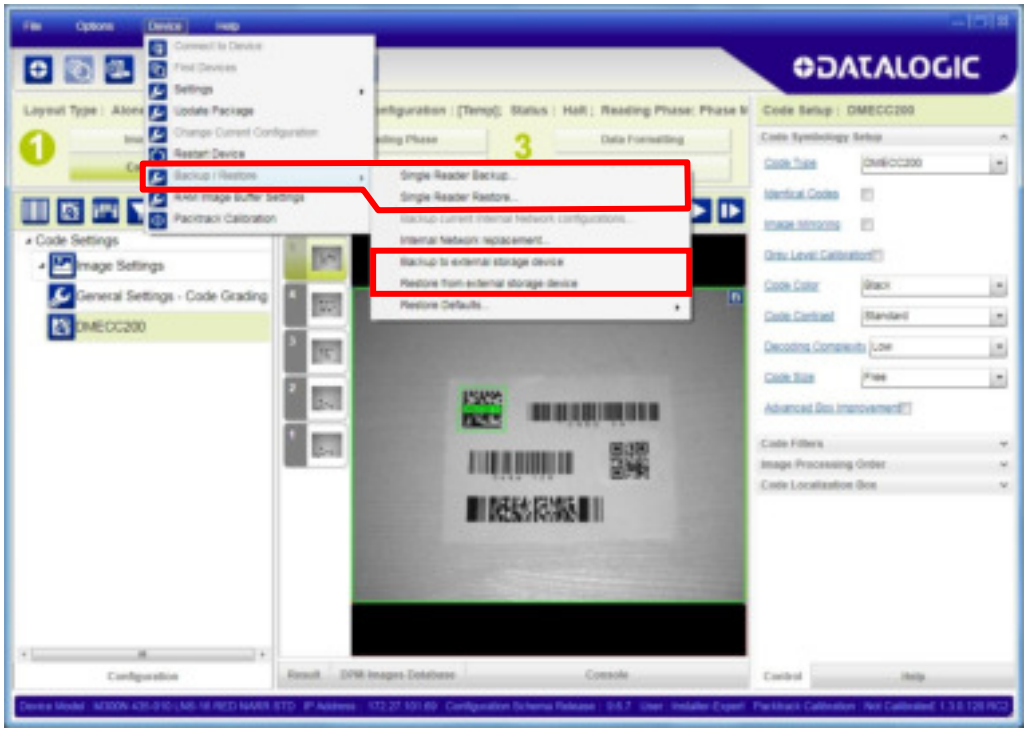

7.5.1 Backup

To perform a **Backup**:

1. From the DL.CODE Device menu, select either **Single Reader Backup** (to file on PC); or **Backup to external storage device**.

NOTE: For ID-NET network Backup (Master only), select the **Backup current Internal Network configurations** selection.

You will be reminded that configuration in temporary memory will not be saved so you should save the configuration to the reader before performing Backup.

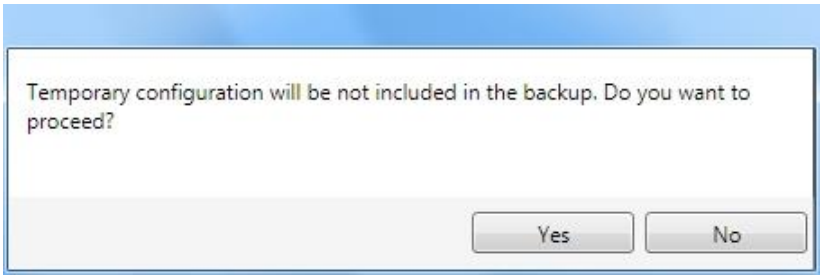

If you are performing a backup to a file you will be asked whether to include the firmware or not.

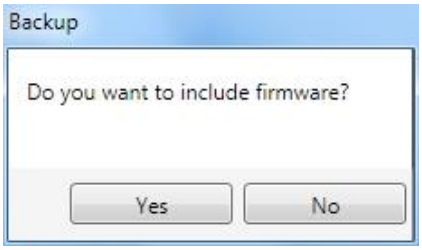

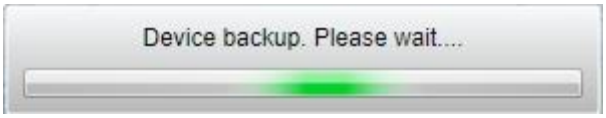

At the end of the backup, DL.CODE shows a message indicating successful completion.

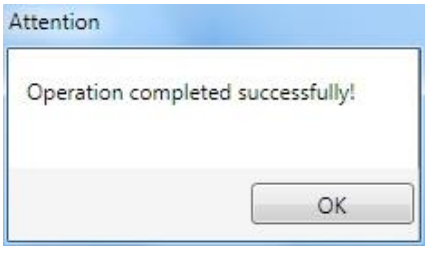

7.5.2 Restore

To perform a **Restore**:

1. From the DL.CODE Device menu, select either **Single Reader Restore** (from file on PC); or **Restore from external storage device**.

NOTE: For ID-NET network Restore (Master only), select the **Internal Network replacement** selection.

If restoring an ID-NET network though the Master, this may take a few minutes.

At the end of the restore, DL.CODE shows a message indicating successful completion.

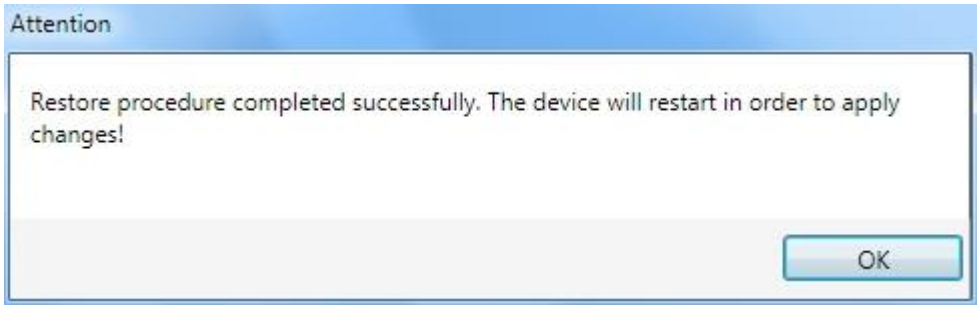

7.5.3 Replacement

CAUTION: The replacement device **must be the exact same model** as the device it is replacing.

The **Restore** function also provides easy and secure Single Device Replacement:

1. Remove the device to be replaced.
2. Connect the new device (make sure the new device has been previously set to factory default).
3. Run the Restore procedure by selecting either **Single Reader Restore** (from file on PC) or **Restore from external storage device** item (see: Restore procedure).

NOTE: In case of Backup or Restore operation failures, error messages will be displayed in the Monitor Diagnostic page.

7.6 RESTORE DEFAULTS

The device parameters are divided into two main classes, Configuration and Environment which are affected differently by the Restore Defaults commands.

- The Configuration parameters are the ones set in the various steps of the configuration process and are specific to each application. When multiple configurations (jobs) are saved on a single device, these parameters can be different from one configuration to the next.

- Environment parameters regard the device Identity and Position in a Network (Ethernet, ID-NET, etc.) and are not influenced by the Default (or any other) Configuration present in memory.

7.6.1 Restore Default Startup Configuration

The Default configuration is always present on the reader and in fact it is not modifiable and cannot be deleted. It can always be restored by simply selecting it from the Open from Device configuration list.

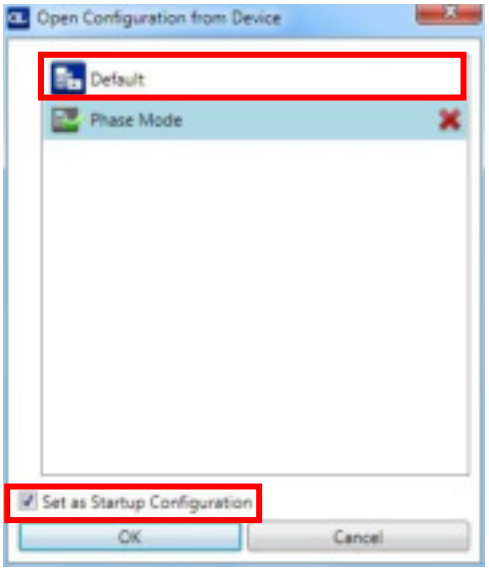

The same action can be performed from the Device menu >Backup/Restore > Restore Defaults > **Restore Default Startup Configuration**. The Default Configuration will be set to run at startup and the reader will be reset.

Any previously saved configurations on the device will remain in memory, but the Default configuration is set as the startup configuration.

7.6.2 Restore Default Environment

Restore Default Environment returns all Environment parameters to their factory default settings. The default IP address will be restored as well as all the parameters managed in the Device Environment Configuration window.

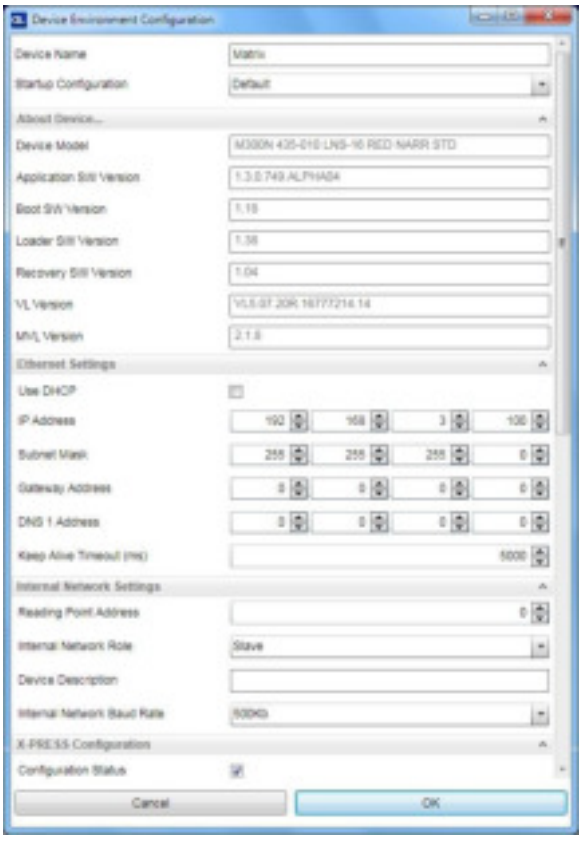

The Factory Default static IP address for all Matrix N Family readers is:

IP Address = 192.168.3.100

Any previously saved configurations on the device will remain in memory, but the Default configuration is set as the startup configuration.

7.6.3 Restore Factory Defaults

In order to return a device to its absolute Factory default parameters (for example device replacement) it is necessary to use the **Restore Factory Defaults** command. You will be prompted to confirm.

All Environment parameters will be restored to Factory default values **and any existing configurations stored on the device will be erased**. The device will be reset and therefore start in run mode with the factory default configuration.

7.7 DIAGNOSTIC ALARMS

By using the **DL.CODE Monitor** functions from the File menu (or Monitor icon), you can get information about the state of the ID-NET network.

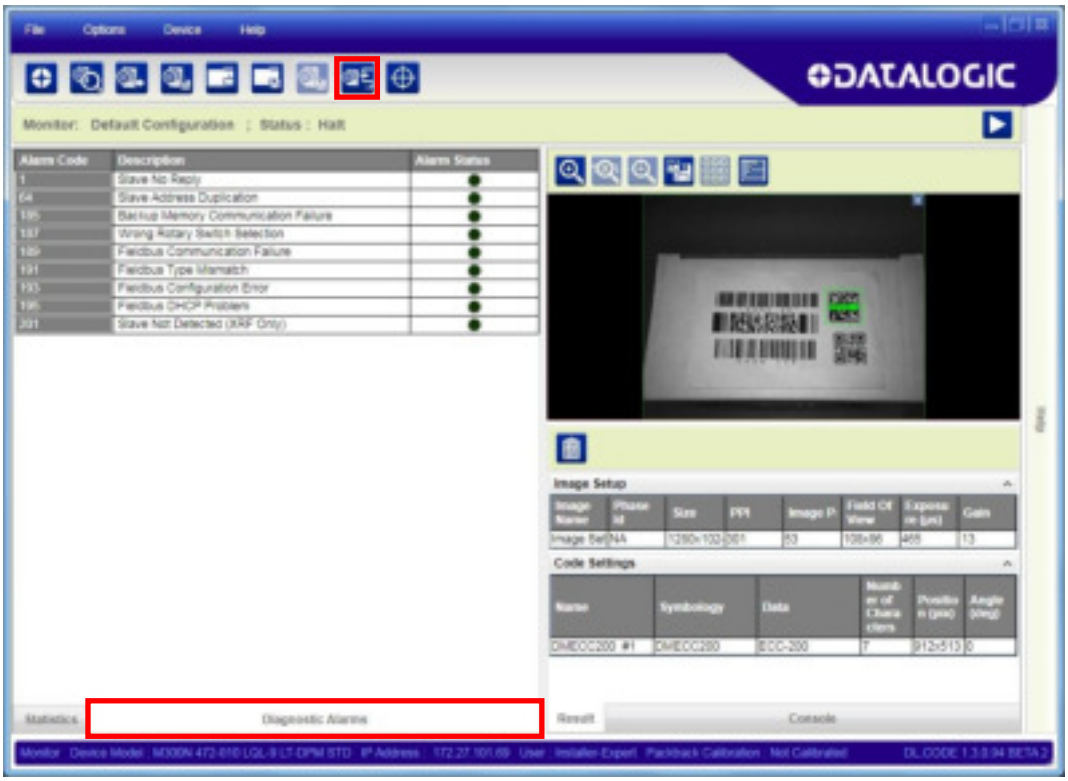

Figure 74 - Diagnostic Alarms

7.8 STATISTICS

Statistics on the reading performance can be viewed by enabling the Statistics panel from the **DL.CODE Monitor** item selected from the File menu (or Monitor icon).

Figure 75 - Reading Statistics

The enabled Statistical Counters can be selected from the Device>Settings>Configuration Settings menu.

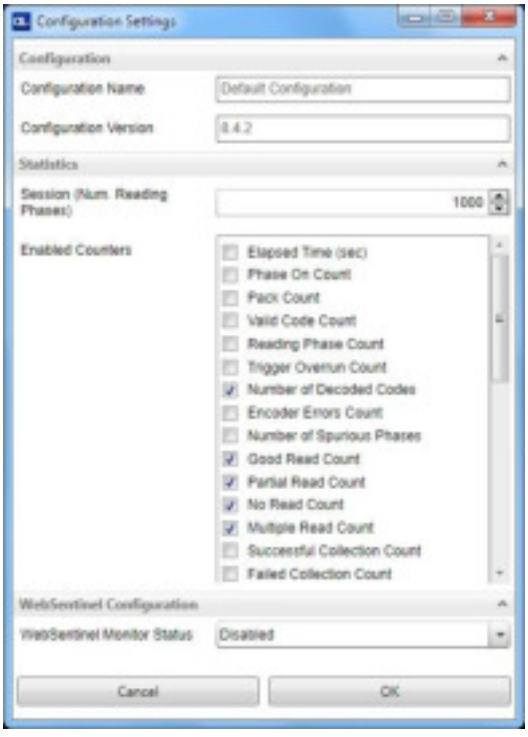

7.9 BM150 DISPLAY MODULE CONFIGURATION AND MESSAGES

The BM150 display module is an optional accessory for the CBX500 connection box. Although independent, it is an extension of the reader's HMI Interface, so through its keypad it provides execution of HMI features such as Test, Focus/Locate, Calibration and Code Setting. It also displays device status information, reading results, diagnostic and network messages. Since it connects through the BM100 backup memory module, it provides access to Backup and Restore features through its Extended menu.

7.9.1 Configuration Through DL.CODE

BM150 must be detected through the BM100 backup memory module at power-up/reset and this is done through a command setting in DL.CODE. By connecting the reader to DL.CODE the following parameters can be managed.

In the Device>Settings>Settings>Maintenance window:

- **Enable BM100 Detection**
  Checked (Enabled): the BM100 backup memory module will be detected on power-up/reset; therefore the BM150 display module (if present), will also be enabled.
  Unchecked (Disabled): the BM100 backup memory module will **not** be detected on power-up/reset; therefore the BM150 display module (if present), will also **not** be enabled.
- **BM150 Display Layout (Master Only)**
  Reading Mask Only: the Reading Mask screen is sent to the BM150 display.
  Reading Mask/Device State: the Reading Mask/Device State screen is sent to the BM150 display.

7.9.2 Accessing the HMI Interface Through Keypad and Display Menu

Through its keypad and display, the BM150 provides a remote extension of the reader's HMI Interface. The HMI default menu items can be accessed as well as the View menu for Master devices and the Extended menu for Backup and Restore functions.

To enter the Main Menu press the **Up** and **Down** buttons simultaneously.

The menu structure is shown below.

Up Enter Down

Figure 76 – BM150 Keypad

Main Menu:

1. **[Exit]** (exits HMI Interface menu)
2. **Test Mode** (performs Test mode)
3. **Focus/Locate** (performs Focus function: turns on Blue Diamonds and laser pointers)
4. **Calibration** (performs Setup function)
5. **Code Setting** (performs Learn function)
6. **Match Code Tra…**(Training: allows reading a code and storing it as the Match code)

7. **View Menu (Master Only):**
    1. **[Exit]** (returns to Main menu)
    2. **Standard** (displays the Standard Reading Results screen during run mode)
    3. **Reading Mask** (displays the Reading Mask or Reading Mask/Device State screen during run mode) depends on the selection in DL.CODE see par. 7.9.1.
    4. **Network State** (displays the Network State screen during run mode)
8. **Extended Menu:**
    1. **[Exit]** (returns to Main menu)
    2. **Backup** (performs Backup - uninterruptible)
    3. **Restore** (performs Restore - uninterruptible)
    4. **Erase** (erases the backup configuration in external memory - uninterruptible)

To move through the list press and release the **Up** or **Down** key.

To select an item or enter a submenu, press and release the **Enter** key. After executing an HMI function the display shows a result message and then automatically exits from the menu structure.

To exit a menu manually, press and release the **Enter** key at the [Exit] item or press the **Up** and **Down** buttons simultaneously.

To exit from a running HMI function, press the **Up** and **Down** buttons simultaneously. These functions will also exit upon their configured timeout.

NOTE: When the HMI Interface is entered from either the Local Device (reader) or Remote Device (BM150), the key(s) on the other device are disabled.

NOTE: When the reader is connected to DL.CODE, access to the BM150 HMI Interface is disabled.

NOTE: The "Reset Reader to Factory Default Environment" function of the HMI Interface is only available on the local device (reader), and not on the BM150.

7.9.3 Display Messages

The following examples of Remote Display messages are given to help interpret the information reported. The content of these messages depends on the connected reader.

Welcome Message:

```
M M M M M M M M M M M M
K K K V V V V V V V V V     R R R     N N N
S N     D D D D D D D D D
E T H     A A A . A A A . A A A . A A A
```

M = scanner model
K = software – STD=Standard, SS =Special
V = software version
R = Device Network Type – MUL=Multidata, SYN=Synchronized, ALN=Alone
N = Device Network Setting – M00=ID-NET Network Master, Sxx= ID-NET Network Slave address, Null string= Alone (no network)
D = device serial number
A = Ethernet IP Address

Test Mode Results:

```
A A A %     Z Z Z Z Z Z Z Z Z Z Z Z Z Z Z Z
Z Z Z Z Z Z Z Z Z Z Z Z Z Z Z Z Z Z Z Z
Z Z Z Z Z Z Z Z Z Z Z Z Z Z Z Z Z Z Z Z
```

A = reading percentage from 000 to 100%.
Z = code content.

Calibration (Setup) Results:

```
E x p = X X X X
G a i n = G G
C a l i b r a t i o n
O K     ( p e r m a n e n t )
```

X = exposure value (in μs).
G = gain value

Code Setting (Learn) Results:

```
X X X X X X X X X

C o d e   S e t t i n g
O K     ( p e r m a n e n t )
```

X = recognized code symbology.

Diagnostic Alarms:

Diagnostic error messages are sent to the BM150 display as numeric Alarm Codes, (even if Failure Messages are selected for data transmission the numeric Alarm Code is sent to the display).

```
A l e r t      :
F a i l u r e          # X X X

R R R   N N N
```

X = numeric Alarm Code (see below for the list of Alarm Codes)
R = Device Network Type – MUL=Multidata, SYN=Synchronized, ALN=Alone
N = Device Network Setting – M00=ID-NET Network Master, Sxx= ID-NET Network Slave address, Null string= Alone (no network)

Alarm Code	Description
1	Slave No Reply
64	Slave Address Duplication
171	Protocol Index Failure
185	Backup Memory Communication Failure
187	Wrong Rotary Switch Selection
189	Fieldbus Communication Failure
191	Fieldbus Type Mismatch
193	Fieldbus Configuration Error
195	Fieldbus DHCP Problem
201	No XRF Slave(s) Detected

Slave Node Alarms (Master only):

```
A l e r t      : I D - N E T
N o d e # X X   M i s s i n g

R R R   M 0 0
```

X = slave node number (1-31)
R = Device Network Type – MUL=Multidata, SYN=Synchronized

Network State (Master only):

```
0       N e t w o r k       1 5
M S S S S S S S S S S S S S S S
1 6     N e t w o r k       3 1
S S S S S S S S S S S S S S S S
```

M = Master diagnostic condition; S = Slave diagnostic condition:
- ***** = scanner OK
- **-** =scanner not detected at startup
- **?** =scanner detected at startup but not responding to diagnostic polling
- **!** = scanner diagnostic error

Standard Reading Results:

```
A A A A A A A A A A A A A
X X X X X X X X X X X X X X X X X X X X
X X X X X X X X X X X X X X X X X X X X
Y Y C o d e s
```

A = reading result – Good Read, Partial Read, Multiple Read
X = code content
Y = number of codes read

Reading Mask Only (Master Only):

```
X X X X X X X X X X X X X X X X . . .
G Y Y Y % N Y Y Y % M Y Y Y % P Y Y Y %
S S S S S S S S S S S S S S S S
T T T T T T T T T T T T T T T T
```

X = code content (or "No Read" or "Multiple Read")
Y = Good Read, No Read, Multiple Read and Partial Read counters on the last 100 codes read (%)
S = Reading Mask for Stand Alone or Master plus Slave readers 1 - 15
(0 = No Read, 1 = Good Read, M = Multiple Read)
T = Reading Mask for Slave readers 16 - 31
(0 = No Read, 1 = Good Read, M = Multiple Read)

Reading Mask/Device State (Master Only):

```
X X X X X X X X X X X X X X X X X . . .
P = Y Y Y Y Y Y Y   G R = Z Z Z . Z Z %
S S S S S S S S S S S S S S S S
U U U U U U U U U U U U U U U U
```

X = Recognized code label data (or "No Read" or "Multiple Read")
Y = Phase Counter (range: 0000000 to 9999999)
Z = Good Read or Multiple Read counters (%)
S = Reading Mask for Stand Alone or Master plus Slave readers 1 - 15
(0 = No Read, 1 = Good Read, M = Multiple Read)
U = Diagnostic condition for Stand Alone or Master plus Slave readers 1 - 15:
***** = reader OK
- = reader not detected at startup
? = reader detected at startup but not responding to diagnostic polling
! = reader diagnostic error

7.9.4 BM150 Backup and Restore Procedure

The Backup and Restore functions are valid for any application layout type (point-to-point, network, etc.) using CBX500 connection boxes through the BM100 Backup module (required accessory for BM150 installation).

The Backup and Restore functions are managed through the BM150 display and keypad and therefore are disabled at the BM100 Backup/Restore button.

If it ever becomes necessary to replace the reading device it can be quickly configured through the restore procedure.

BM150 provides complete backup and restore functions (Configuration and Environmental parameters) with the following difference:

For Single Readers or individual ID-NET Slaves:

- Backup and Restore functions provide parameter storage including all configuration jobs present on the reader.

For Master Readers in ID-NET Master/Slave networks:

- Backup and Restore functions provide parameter storage of only the Startup Configuration for the Master and all Slaves present in the network.

CAUTION: For Master/Slave networks any other configurations (jobs) stored in the device memory will not be backed up. Therefore upon a restore, all jobs other than the startup configuration will be overwritten (erased). It is strongly recommended to save all configurations to backup files.

The Slaves must always be configured with the same network baudrate as the Master for correct functioning including performing Backup and Restore procedures.

Backup and Restore functions cannot be interrupted once started.

To perform ***Backup***:

1. Make sure the Write Protection switch on the BM100 is unlocked.
2. Select the **Backup** item from the Extended menu and press the Enter key.
3. When the procedure is complete a message appears on the display showing the results (**Backup OK 1 File Saved** or an error message).
4. Set the Write Protection switch to locked.

To perform ***Restore***:

1. Select the **Restore** item from the Extended menu and press the Enter key.
2. When the procedure is complete a message appears on the display showing the results (**Restore OK 1 File Restored** or an error message).

8 MAINTENANCE

8.1 CLEANING

Clean the lens cover (see Figure A, 3) periodically for continued correct operation of the reader.

Dust, dirt, etc. on the lens cover may alter the reading performance.

Repeat the operation frequently in particularly dirty environments.

Use soft material and alcohol to clean the lens cover and avoid any abrasive substances.

9 TROUBLESHOOTING

9.1 GENERAL GUIDELINES

- When wiring the device, pay careful attention to the signal name (acronym) on the CBX100/500 spring clamp connectors (chp. 4). If you are connecting directly to the Matrix 450N M12 17-pin connector pay attention to the pin number of the signals (Appendix A).
- If you need information about a certain reader parameter you can refer to the DL.CODE™ help on line. Connect the device and click on the link to the parameter you're interested in.
- If you're unable to fix the problem and you're going to contact your local Datalogic office or Datalogic Partner or ARC, we suggest providing (if possible): Application Program version, Parameter Configuration file, Serial Number and Order Number of your reader. You can get most of this information while DL.CODE is connected to the reader.

TROUBLESHOOTING GUIDE	
Problem	**Suggestion**
DL.CODE Installation: Autorun or Start.hta doesn't run	• Check Windows settings to see if Autorun is disabled. • Associate the file type .hta with the Microsoft HTML Application host **mshta.exe** in Windows\System32.
Power ON: the "POWER" LED is not lit.	• Is power connected? • If using a power adapter (like PG6000), is it connected to wall outlet? • If using rail power, does rail have power? • If using CBX, does it have power (check switch and LED)? • Check if you are referring to the M12 17-pin connector or to the CBX spring clamp connectors. • Measure Voltage either at pin **1** and pin **2** (for 17-pin connector) or at spring clamp **Vdc** and **GND** (for CBX).
One Shot or Phase Mode using the Input 1 (External Trigger) or Input 2: the "TRIGGER" LED is not blinking while the External Trigger is switching.	• Check if you are referring to the 17-pin connector or to the CBX spring clamp connectors. • Is the sensor connected to the Input 1 or Input 2? • Is power supplied to the photo sensor? • For NPN configuration, is power supplied to one of the two I1 or I2 signals (A or B)? • For PNP configuration, is one of the two I1 or I2 signals grounded (A or B)? • Are the photo sensor LEDS (if any) working correctly? • Is the sensor/reflector system aligned (if present)? • On the Reading Phase step check the Input 1 or Input 2 ***Debouncing Time*** parameter setting. • On the Reading Phase step check the settings for ***Acquisition Trigger, Reading Phase-ON,*** and ***Reading Phase-OFF*** parameters.

TROUBLESHOOTING GUIDE	
Problem	**Suggestion**
One Shot or Phase Mode using serial trigger source: the "TRIGGER" LED is not blinking.	• On the Reading Phase step check the settings for ***Acquisition Trigger, Reading Phase-ON,*** and ***Reading Phase-OFF*** parameters. • Are the COM port parameters (***Baud Rate, Parity, Data Bits, Stop Bits***) correctly assigned? • On the Reading Phase step, check the settings of ***Acquisition Trigger String, Reading Phase-ON String*** and ***Reading Phase-OFF String*** parameters. • Is the serial trigger source correctly connected?
Phase Mode: the "TRIGGER" LED is correctly blinking but no image is displayed in the DL.CODE window.	• Is the Phase frequency lower than the maximum frame rate?
Continuous Mode: the "TRIGGER" LED is not blinking.	• Verify the correct software configuration settings.
Any Operating Mode: the "TRIGGER" LED is correctly blinking but no result is transmitted by the reader at the end of the reading phase collection.	• Check the Code Collection parameters on the Reading Phase step and the Data Formatting parameters on the data Formatting step.
Image not clear:	• verify the Focus procedure
Image focused but not decoded:	• verify the Calibrate Image Density procedure.
Reading: the reader always transmits the ***No Read Message***	• Run the Rapid Configuration procedure in chapter 1. • Position the reader as described in par. **Error! Reference source not found.** and through DL.CODE: – Tune the Acquisition Delay on Trigger, if the moving code is out of the reader field of view; – Set the Continuous Operating Mode if no external trigger source is available; – Fine tune the Image Setup to improve the code image quality; – Check the code parameter settings in the Code Setup step: 2D Codes, 1D Codes, and Postal Codes; – View the full resolution code image to check the printing or marking quality.
Communication: reader is not transmitting anything to the host.	• Is the serial cable wiring correct? • If using CBX, be sure the RS422 termination switch is OFF. • Are the host serial port settings the same as the reader serial port settings? • In DL.CODE Device menu > Settings > Settings > LED Configuration, the COM LED Function can be configured to indicate Main Serial Port TX or Main Serial Port RX.

TROUBLESHOOTING GUIDE	
Problem	**Suggestion**
Communication: data transferred to the host are incorrect, corrupted or incomplete.	• Are the host serial port settings the same as the reader serial port settings? • In the DL.CODE™ Data Formatting step check the settings of Header and Terminator String parameters. • In the DL.CODE™ Data Formatting step, check the various Message Field parameter settings.
Configuration: cannot access environment parameters in DL.CODE (Device>Settings>Settings menu item is grey)	• Are you using the Installer - Expert User level? If not change it in the Options>Change User menu.
How do I obtain my reader Serial Number?	• The reader Serial Number consists of 9 characters: one letter, 2 numbers, another letter followed by 5 numbers. • The reader Serial Number is printed on a label that is affixed on the bottom case near the reading window. • The Serial Number is also visible from the DL.CODE Device List Area.
How do I obtain my reader Order Number?	• The reader Order Number consists of 9 numbers. • The reader Order Number can be obtained by comparing the Device Model (in DL.CODE Device Menu > Settings > Settings > About Device) with the product models page on the Datalogic website.

10 TECHNICAL FEATURES

ELECTRICAL FEATURES	
Power	
Supply Voltage	24 Vdc ± 20%
Consumption (max)	2.5 A (0.5 A Matrix 450N; 2 A LT-03x) see note in par. 4.1.1.
Communication Interfaces	
Main	
- RS232	2400 to 115200 bit/s
- RS422 full-duplex	2400 to 115200 bit/s
Auxiliary - RS232	2400 to 115200 bit/s
ID-NET™	Up to 1MBaud
Ethernet (Built-in)	1000 Mbit/s, Gigabit Ethernet
supported application protocols	TCP/IP, EtherNet/IP, Modbus TCP
Inputs	
Input 1(External Trigger) and Input 2	Opto-coupled and polarity insensitive
Max. Voltage	30 Vdc
Max. Input Current	10 mA
Outputs	
Output 1 and Output 2	Opto-coupled
V_{Out} (I_{Load} = 0 mA) Max.	24 Vdc
V_{Out} (I_{Load} = 10 mA) Max.	1.8 Vdc
$P_D = V_{Out} \times I_{Load}$ Max.	170 mW

OPTICAL FEATURES	
Image Sensor	CCD
Image Format	2448 x 2050
Frame Rate	15 frames/sec.
Pitch	± 35°
Tilt	0° - 360°
Lighting System	LT-03x Family Illuminators to EN 62471
Laser Safety Class (pointers)	Class 2 Laser Light to IEC60825-1

ENVIRONMENTAL FEATURES	
Operating Temperature[6]	0 to 50 °C (32 to 122 °F)
Storage Temperature	-20 to 70 °C (-4 to 158 °F)
Max. Humidity	90% non condensing
Vibration Resistance[7]	1.5 mm @ 5 to 9 Hz; 0.5 g @ 9 to 150 Hz 2 hours on each axis
EN 60068-2-6	2 g @ 70 to 500 Hz; 2 hours on each axis
Shock Resistance	30g; 11 ms;
EN 60068-2-27	3 shocks on each axis
Protection Class[8]	IP65
EN 60529	

* when connected to the CBX connection boxes the electrical features for Output 1 and 2 become the following: Opto-isolated; V_{CE} = 30 Vdc max.; I_{CE} = 40 mA continuous max.; 130 mA pulsed max.; $V_{CE\ saturation}$ = 1 Vdc max. @ 10 mA; P_D = 90 mW Max. @ 50 °C ambient temp.

[6] High ambient temperature applications should use metal mounting bracket for heat dissipation.

[7] When operating in high vibration environments use two L-shaped mounting brackets and mount the anti-vibration kit for C-mount lenses, see par. **Error! Reference source not found.**.

[8] Requires correct connection to IP67 cables with seals and Lens Cover mounting.

PHYSICAL FEATURES	
Dimensions Matrix 450N Matrix 450N + LT-03x	 123 x 64 x 143 mm (4.8 x 2.5 x 5.6 in) 202 x 213 x 179 mm (8.0 x 8.4 x 7.1 in)
Weight (with lens and LT-03x)	3000 g. (6.6 lbs.)
Material	Aluminium

SOFTWARE FEATURES		
Readable Code Symbologies		
1-D and stacked	**2-D**	**POSTAL**
• PDF417 (Standard and Micro PDF417) • Code 128 (GS1-128) • Code 39 (Standard and Full ASCII) • Code 32 • MSI • Standard 2 of 5 • Matrix 2 of 5 • Interleaved 2 of 5 • Codabar • Code 93 • Pharmacode • EAN-8/13 - UPC-A/E (including Addon 2 and Addon 5) • GS1 DataBar Family • Composite Symbologies	• Data Matrix ECC 200 (Standard, GS1 and Direct Marking) • QR Code (Standard and Direct Marking) • MicroQR Code • MAXICODE • Aztec Code	• Australia Post • Royal Mail 4 State Customer • Kix Code • Japan Post • PLANET • POSTNET • POSTNET (+BB) • Intelligent Mail • Swedish Post
Operating Mode	CONTINUOUS, ONE SHOT, PHASE MODE, PACKTRACK	
Configuration Methods	• X-PRESS Human Machine Interface • Windows-based SW (DL.CODE) via Ethernet link • Host Mode Programming sequences	
Parameter Storage	Permanent memory (Flash)	

CODE QUALITY METRICS	
Standard	**Supported Symbologies**
ISO/IEC 16022 (always enabled)	Data Matrix ECC 200
ISO/IEC 18004 (always enabled)	QR Code
AIM DPM	Data Matrix ECC 200, QR Code
ISO/IEC 15416	Code 128, Code 39, Interleaved 2 of 5, Codabar, Code 93, EAN-8/13, UPC-A/E

USER INTERFACE	
LED Indicators	Power, Ready, Good; Trigger; Com, Status, (Ethernet Network); (Green Spot); (Red Spot); Laser Pointers
Keypad Button	Configurable via DL.CODE

A ALTERNATIVE CONNECTIONS

The connector pinouts and notes given in this appendix are for custom cabling applications.

POWER, COM AND I/O CONNECTOR

The Matrix 450N reader is equipped with an M16 19-pin male connector (Binder, 423 Series) for connection to the power supply, serial interfaces and input/output signals. The details of the connector pins are indicated in the following table. **Matrix 450N cannot source power through this connector**.

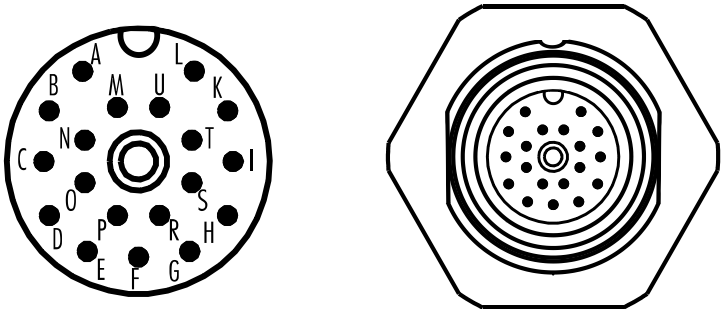

Figure 77 – M16 19-pin Male Power, COM and I/O Connector

Power, COM, and I/O Connector Pinout			
Pin	**Name**	**Function**	
A	Vdc	Power supply input voltage +	
L	GND	Power supply input voltage -	
K	CHASSIS	Cable shield internally connected by capacitor to the chassis	
B	I1A	External Trigger A (polarity insensitive)	
C	I1B	External Trigger B (polarity insensitive)	
D	I2A	Input 2 A (polarity insensitive)	
E	I2B	Input 2 B (polarity insensitive)	
H	O1+	Output 1 +	
F	O1-	Output 1 -	
G	O2+	Output 2 +	
I	O2-	Output 2 -	
S	RX	Auxiliary RS232 RX	
O	TX	Auxiliary RS232 TX	
R	ID+	ID-NET™ network +	
P	ID-	ID-NET™ network -	
Pin	**Name**	**RS232**	**RS422 Full-Duplex**
M	MAIN INTERFACE (SW SELECTABLE)	TX	TX+
U		RX	*RX+
N		-	TX-
T		-	*RX-

* Do not leave floating, see par. for connection details.

In order to meet EMC requirements:

- connect the reader chassis to the plant earth ground by means of a flat copper braid shorter than 100 mm;
- connect the main interface cable shield to pin K of the 19-pin connector.

MATRIX 450N LIGHTING SYSTEM CONTROL CONNECTOR

Matrix 450N controls the LT-03x series lighting system from this connector through software. Matrix 450N can also receive power from this input, normally from the LT-03x lighting system through the CAB-LD-002 cable. **Matrix 450N cannot source power through this connector**.

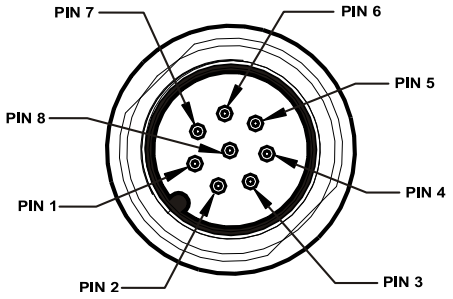

Figure 78 - M12 8-pin Male Lighting System Control Connector

Matrix 450N M12 8-pin Lighting System Connector Pinout		
Pin	**Name**	**Function**
1	SPOT1	Red Spot control signal
2	STROBE	Illuminator control signal
3	SPOT2	Green Spot control signal
4	AIMING	Aiming Lasers control signal
5	LDA	I2C channel data signal
6	LDL	I2C channel clock signal
7	GND	Power supply input voltage negative
8	VDC (*)	Power supply input voltage positive

(*) in the CAB-LD-102 LT Driver No Power cable, this pin isn't connected. In this way the Matrix 450N is powered ONLY from pin A of the M16 19-pin male connector.

LT-03x Input Power Connector (on LT-03x)

The LT-03x lighting system must be powered from this connector.

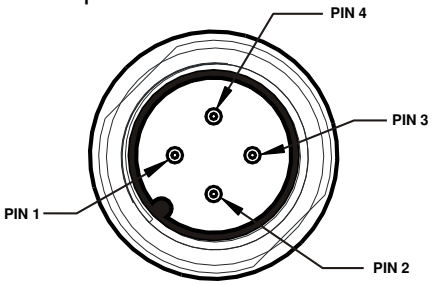

Figure 79 - M12 4-pin Male LT-03x Input Power Connector

LT-03x M12 4-Pin Input Power Connector pinout		
Pin	**Name**	**Function**
1	VDC	Power supply input voltage positive
2	VDC	Power supply input voltage positive
3	GND	Power supply input voltage negative
4	GND	Power supply input voltage negative

Recommended Power Supplies

The following accessory power supplies are recommended for Matrix 450N + LT-03x assemblies:

Accessory Power Supplies	
Power Supply	**Number of Matrix 450N+LT-03xs Supported**
PG-120	1
PWR-120	1
PWR-480B	4

NOTE: If using separate power sources for LT-03x and Matrix 450N, make sure that LT-03x is powered up before Matrix 450N in order to be correctly recognized.

If using customer supplied power, keep in mind the following worst case peak current consumption diagram. Depending on the application, the power supply must be able to support up to 12 A current peaks at the frame rate frequency. The frame rate increases if **Image Cropping** is used, see the worst case example below.

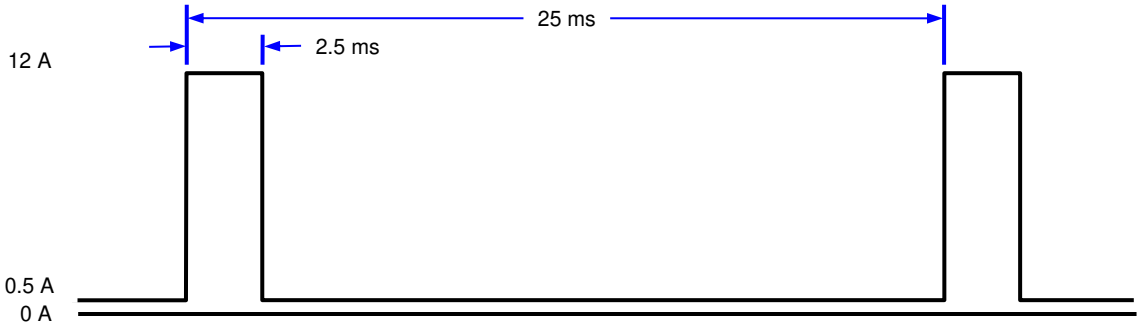

Figure 80 – Worst Case Peak Current Consumption

MATRIX 450N GIGAETHERNET CONNECTOR (**)

An M12 8-pin female connector is provided for the on-board GigaEthernet connection. This interface is 1000BASE-T (also known as IEEE 802.3ab) compliant.

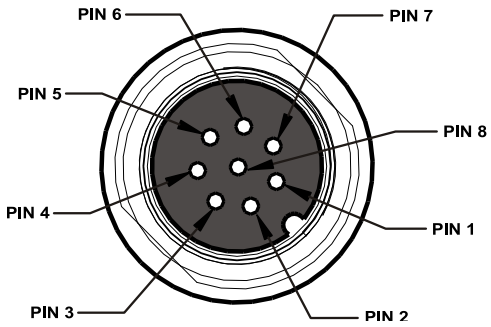

Figure 81 - M12 8-Pin Female GigaEthernet Network Connector

M12 8-Pin GigaEthernet Network Connector pinout		
Pin	**Name**	**Function**
1	DB-	Channel B bi-directional data (negative pin)
2	DD+	Channel D bi-directional data (positive pin)
3	DD-	Channel D bi-directional data (negative pin)
4	DA-	Channel A bi-directional data (negative pin)
5	DC+	Channel C bi-directional data (positive pin)
6	DA+	Channel A bi-directional data (positive pin)
7	DB+	Channel B bi-directional data (positive pin)
8	DC-	Channel C bi-directional data (negative pin)

(**) Due to the high speed signals it is strongly suggested to use CAT5e or CAT6 cables.

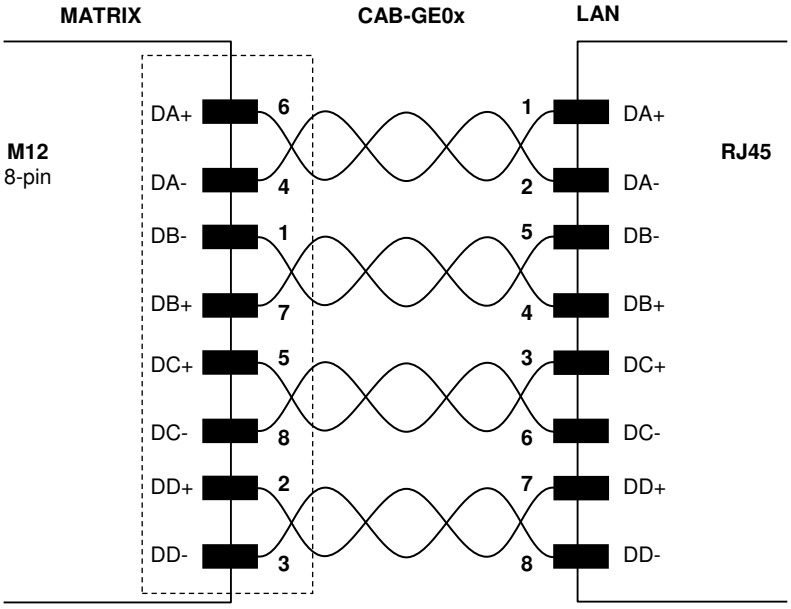

Figure 82 - CAB-GE0x GigaEthernet Cable

ID-NET NETWORK TERMINATION

The network must be properly terminated by a 120 Ohm resistor at the first and last reader of the network.

INPUTS

There are two optocoupled polarity insensitive inputs available on the M16 19-pin connector of the reader: Input 1 (External Trigger) and Input 2, a generic input. See par. for more details.

The electrical features of both inputs are:

INPUT	$\lvert V_{AB} \rvert$ Min.	$\lvert V_{AB} \rvert$ Max.	I_{IN} Max.
Open	0 V	2 V	0 mA
Closed	4.5 V	30 V	10 mA

The relative pins on the M16 19-pin connector are:

Pin	Name	Function
A	Vdc	Power Supply input voltage +
B	I1A	External Trigger A (polarity insensitive)
C	I1B	External Trigger B (polarity insensitive)
D	I2A	Input 2 A (polarity insensitive)
E	I2B	Input 2 B (polarity insensitive)
L	GND	Power Supply input voltage -

OUTPUTS

Two opto-coupled general purpose outputs are available on the M16 19-pin connector. See par. for more details.

The electrical features of the two outputs are the following:

OUTPUT	I_{Load}	V_{Out}
Open	0 mA	30 Vdc Max
Closed	10 mA	1.8 Vdc Max

$P_D = V_{Out} \times I_{oLoad} = 170$ mW Max.

The pinout is the following:

Pin	Name	Function
H	O1+	Configurable digital output 1 - positive pin
F	O1-	Configurable digital output 1 - negative pin
G	O2+	Configurable digital output 2 - positive pin
I	O2-	Configurable digital output 2 - negative pin

The output signals are fully programmable being determined by the configured Activation/Deactivation events, Deactivation Timeout or a combination of the two. For further details refer to the Help On Line page for the Output Setup step in DL.CODE.

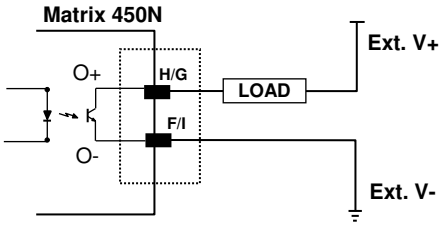

Figure 83 - Isolated Current Sinking Output Connection

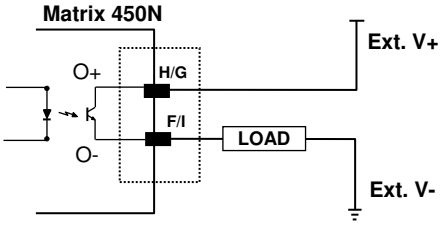

Figure 84 - Isolated Current Sourcing Output Connection

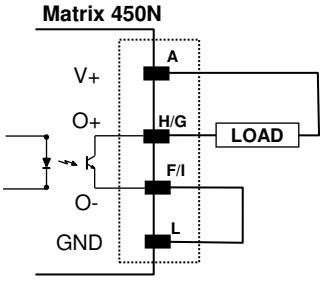

Figure 85 – Non-Isolated Current Sinking Output Connection

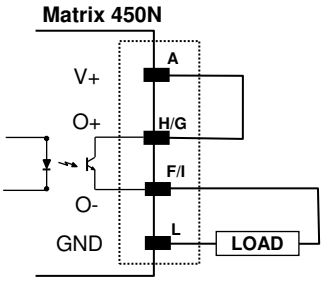

Figure 86 – Non-Isolated Current Sourcing Output Connection

USER INTERFACE - SERIAL HOST

RS232 PC-side connections			
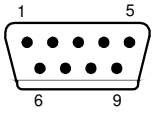 9-pin male connector		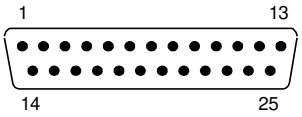 25-pin male connector	
Pin	**Name**	**Pin**	**Name**
2	RX	3	RX
3	TX	2	TX
5	GND	7	GND

How To Build A Simple Interface Test Cable:

The following wiring diagram shows a simple test cable including power, external (push-button) trigger and PC RS232 COM port connections.

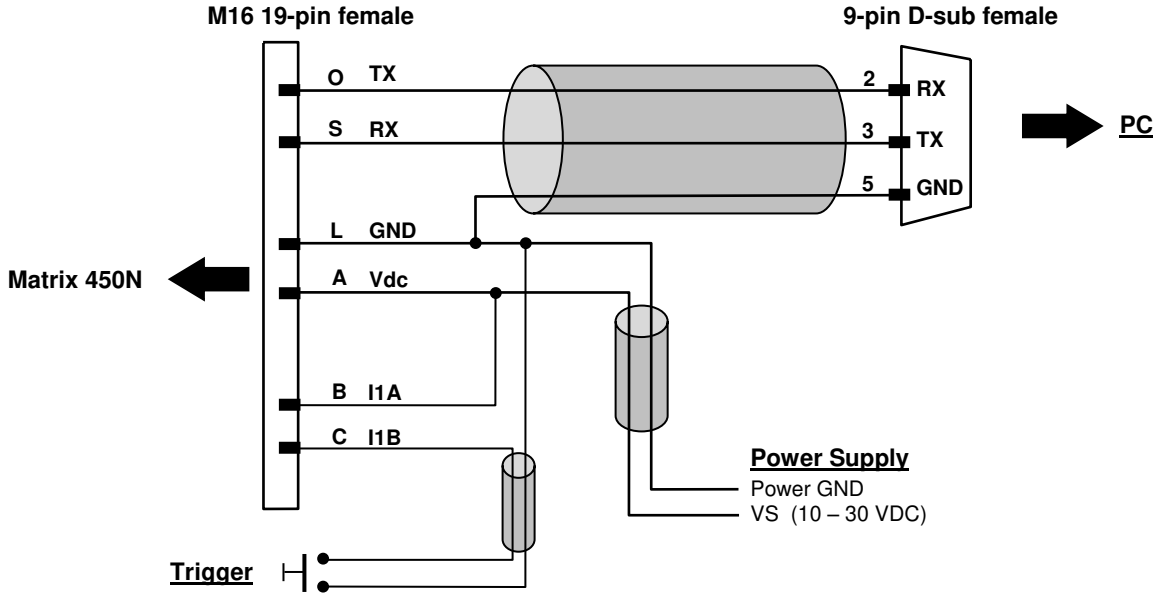

Figure 87- Test Cable for Matrix 450N

GLOSSARY

AIM
(Association for Automatic Identification and Mobility): AIM Global is the international trade association representing automatic identification and mobility technology solution providers.

AIM DPM Quality Guideline
Standard applicable to the symbol quality assessment of direct part marking (DPM) performed in using two-dimensional bar code symbols. It defines modifications to the measurement and grading of several symbol quality parameters.

Barcodes (1D Codes)
A pattern of variable-width bars and spaces which represents numeric or alphanumeric data in machine-readable form. The general format of a barcode symbol consists of a leading margin, start character, data or message character, check character (if any), stop character, and trailing margin. Within this framework, each recognizable symbology uses its own unique format.

BIOS
Basic Input Output System. A collection of ROM-based code with a standard API used to interface with standard PC hardware.

Bit
Binary digit. One bit is the basic unit of binary information. Generally, eight consecutive bits compose one byte of data. The pattern of 0 and 1 values within the byte determines its meaning.

Bits per Second (bps)
Number of bits transmitted or received per second.

Byte
On an addressable boundary, eight adjacent binary digits (0 and 1) combined in a pattern to represent a specific character or numeric value. Bits are numbered from the right, 0 through 7, with bit 0 the low-order bit. One byte in memory can be used to store one ASCII character.

Composite Symbologies
Consist of a linear component, which encodes the item's primary data, and an adjacent 2D composite component, which encodes supplementary data to the linear component.

Dark Field Illumination
Lighting of surfaces at low angles used to avoid direct reflection of the light in the reader's lens.

Decode
To recognize a barcode symbology *(e.g.,* Codabar, Code 128, Code 3 of 9, UPC/EAN, etc.) and analyze the content of the barcode scanned.

Depth of Field
The difference between the minimum and the maximum distance of the object in the field of view that appears to be in focus.

Diffused Illumination
Distributed soft lighting from a wide variety of angles used to eliminate shadows and direct reflection effects from highly reflective surfaces.

Direct Part Mark (DPM)
A symbol marked on an object using specific techniques like dot peening, laser etching, chemical etching, etc.

EEPROM
Electrically Erasable Programmable Read-Only Memory. An on-board non-volatile memory chip.

Element
The basic unit of data encoding in a 1D or 2D symbol. A single bar, space, cell, dot.

Exposure Time
For digital cameras based on image sensors equipped with an electronic shutter, it defines the time during which the image will be exposed to the sensor to be acquired.

Flash
Non-volatile memory for storing application and configuration files.

Host
A computer that serves other terminals in a network, providing services such as network control, database access, special programs, supervisory programs, or programming languages.

Image Processing
Any form of information processing for which the input is an image and the output is for instance a set of features of the image.

Image Resolution
The number of rows and columns of pixels in an image. The total number of pixels of an image sensor.

Image Sensor
Device converting a visual image to an electric signal. It is usually an array of CCD (Charge Coupled Devices) or CMOS (Complementary Metal Oxide Semiconductor) pixel sensors.

IEC
(International Electrotechnical Commission): Global organization that publishes international standards for electrical, electronic, and other technologies.

IP Address
The terminal's network address. Networks use IP addresses to determine where to send data that is being transmitted over a network. An IP address is a 32-bit number referred to as a series of 8-bit numbers in decimal dot notation *(e.*g., 130.24.34.03). The highest 8-bit number you can use is 254.

ISO
(International Organization for Standardization): A network of the national standards institutes of several countries producing world-wide industrial and commercial standards.

LED (Light Emitting Diode)
A low power electronic light source commonly used as an indicator light. It uses less power than an incandescent light bulb but more than a Liquid Crystal Display (LCD).

LED Illuminator
LED technology used as an extended lighting source in which extra optics added to the chip allow it to emit a complex radiated light pattern.

Matrix Symbologies (2D Codes)
An arrangement of regular polygon shaped cells where the center-to-center distance of adjacent elements is uniform. Matrix symbols may include recognition patterns which do not follow the same rules as the other elements within the symbol.

Multi-row (or Stacked) Symbologies
Symbologies where a long symbol is broken into sections and stacked one upon another similar to sentences in a paragraph.

RAM
Random Access Memory. Data in RAM can be accessed in random order, and quickly written and read.

Symbol Verification
The act of processing a code to determine whether or not it meets specific requirements.

Transmission Control Protocol/Internet Protocol (TCP/IP)
A suite of standard network protocols that were originally used in UNIX environments but are now used in many others. The TCP governs sequenced data; the IP governs packet forwarding. TCP/IP is the primary protocol that defines the Internet.

INDEX

A

Accessories, 40
Alternative Connections, 152
Application Examples, 42
Auto Calibration, 100
Auxiliary RS232 Interface, 68

B

Backup and Restore, 133

C

CBX Electrical Connections, 58
Compliance, vii
Connector
  Power, COM and I/O, 152
Connectors
  GigaEthernet Connector, 155
  Lighting System Control Connector, 153
  LT-03x Input Power Connector (on LT-03x), 154

D

Diagnostic Alarms, 138
Diagnostic Indication, 39
Direct Part Marking Applications, 111

E

Ethernet Connection, 77

F

Fieldbus Connection, 80
FOV Calculation, 86

G

General View, xi
Glossary, 159

H

Handling, ix

I

ID-NET Cables, 63
ID-NET Interface, 63
ID-NET Multidata Network, 82
ID-NET Network Termination, 64, 156
ID-NET Response Time, 64
ID-NET Synchronized Network, 83
Image Cropping, 108
Inputs, 69, 156
Internal Network Configurations, 117

L

Layouts, 77

M

Main Serial Interface, 61
Maintenance, 146
Manual Calibration, 101
Mechanical Dimensions, 48
Model Description, 39
Mounting and Positioning Matrix 450N, 50
Mounting with EMK Mirrors, 53
Multi Image Acquisition Setups, 104
Multidata ID-NET Network Configurations, 121

O

On-Board Ethernet Interface, 76
Outputs, 74, 156

P

Package Contents, 47
Pass-through, 81
Pass-through Configurations, 116
Patents, vi
Power Supply, vii, 59

R

Rapid Configuration, 1
Reader Configuration, 99
Reading Features, 86
References, vi
Restore Defaults, 136
RS232 Interface, 61
RS422 Full-Duplex, 62

S

Serial Connection, 79
Software Configuration, 99
Statistics, 139
Support Through The Website, vi
Synchronized ID-NET Network Configurations, 126

T

Technical Features, 150
Troubleshooting, 147

DATALOGIC

www.datalogic.com